THE UNIVERSITY OF CHICAGO
CHICAGO 37 · ILLINOIS

THE ENRICO FERMI INSTITUTE
FOR NUCLEAR STUDIES

~~January 2~~, 1960.
Jan 6 th

Professor Harold C. Urey
School of Science and Engineering
University of California
La Jolla, California.

Dear Harold:

If was very kind of you to write me and even more so to try to schedule a visit. I don't think my doctors would agree that my case is incurable even though they may be willing to admit that they themselves cannot cure it. I am comparatively well at the moment and rather busy finishing up a major paper. I should be through within a week, or ten days at the most, with putting my affairs in order, and this I find very comforting.

I spend my nights in New York Hospital but I might check out before you pass through New York. These days the easiest way to reach me is by telephoning room 2334 of the Hotel St. Moritz (PLaza 5-5800). You might also try extension 206 which is the office of the ~~guest secretary~~ public stenographer in the hotel.

I am so difficult to catch, that I would not suggest your making any serious effort to find me on January 9th when you pass through New York. In any case I am not changed in any way, ~~and~~ I am not much more of a sight than before, and there is no point in making too much fuss about dying.

However, since it is always a great pleasure to see you, if on your arrival in New York your time permits I should be grateful if you were to invest a dime and call me at the Hotel St.Moritz.

With kindest regards,

Sincerely,

Leo Szilard

Leo Szilard

Szilard

January 8, 1960

Professor Theodore T. Puck
University of Colorado
Department of Biophysics
Denver 20, Colorado

Dear Professor Puck:

Since he has been away from the campus so much recently, Dr. Urey has asked me to acknowledge your letter of December 14th and to apologize for the delayed reply.

However, he has been industriously checking into the Leo Szilard matter and finds that he is not in need of financial aid, at least at the present. However, Dr. Urey plans to check further with Dr. Szilard's friends to learn more details.

Very sincerely,

Secretary to Dr. Urey

New York Hospital
Cornell Med. School
69th St.
Re 4-9609

UNIVERSITY OF COLORADO
MEDICAL CENTER
4200 EAST NINTH AVENUE
DENVER 20, COLORADO

DEPARTMENT OF BIOPHYSICS
COLORADO GENERAL HOSPITAL
COLORADO PSYCHOPATHIC HOSPITAL
SCHOOL OF MEDICINE

December 14, 1959

Dr. Harold C. Urey
Department of Chemistry
University of Chicago
Chicago 37, Illinois

Dear Dr. Urey:

Leo Szilard is in the hospital gravely ill with cancer and the intelligence which reaches me is that his time will be very short indeed. The probabilities are being estimated within matters of months. I also have private reasons to believe that his financial resources are desperately inadequate to meet this catastrophic situation.

I am sure you agree with me that Leo Szilard has been one of the most scientifically productive men in our generation and also one of the most unsuitably recognized. Not only have his contributions illuminated an exceedingly diverse number of scientific fields but he has had extensive impact on younger men whose enthusiasm for the very best in science he has intensified and whose training he has in informal ways advanced to an astonishing degree. Productive scientists all over the world admit their debt to this man. I am writing you now to determine whether you can be of assistance in securing for him some kind of recognition which may be accompanied by a financial contribution which would be so sorely needed at this time. Leo has never sought recognition or award but surely his contributions to science and society are deserving of the highest gratitude of this country.

Sincerely,

TTPuck

Theodore T. Puck, Ph.D.
Professor and Head
Department of Biophysics

TTP:mh

H.C. Urey ✓

✓ V. Murthy
✓ G. Golis
✓ M. Shima

March 7, 1962

Considerable nation-wide interest has been aroused by the speech and proposals made by Dr. Szilard in the manuscript which is enclosed with this letter. A number of our colleagues feel that the temper of the times is such that these proposals warrant at least serious consideration, and we have therefore taken the liberty of distributing the manuscript to individuals on the faculty. Would you please pass the manuscript on to your research personnel and associates after you have read it?

There has been interest expressed in having an informal discussion of these proposals and what to do about them. In the near future an announcement of the date and place for the discussion will be made.

David M. Bonner
S. J. Singer
James T. Arnold
Martin Kamen
Joyce Lewin
Sheldon Schultz

MEMORANDUM

From: Leo Szilard

30 April, 1964

To: Roger Revelle
John Isaacs
George Backus
Keith Bruckner
Harry Suhl
Bernd Matthias
Clay Perry
Harold Urey
Jim Arnold
Joe Mayer
Walter Munk
John Singer
Herbert York

The enclosed paper, which will appear in the June issue of the National Academy of Sciences, might perhaps interest you. It is just possible that I have succeeded in guessing right the processes involved in the recording and the recall of a sensory experience.

If you find time to read this paper and if thereafter you think you might like to participate in a discussion of it, please call me at The Salk Institute, 453-4100. I propose to set aside a Saturday morning, 10 - 12.30 or Saturday afternoon 2.30 - 5, for discussing this paper in a small group of those who have read it. If you call me and I am not in, you might talk to Jean Mangan, my secretary, and tell her whether it would be convenient for you to participate in such a discussion. Also if you have a strong preference either for Saturday morning or Saturday afternoon, would you be good enough to indicate this on that occasion?

Leo Szilard

Leo Szilard

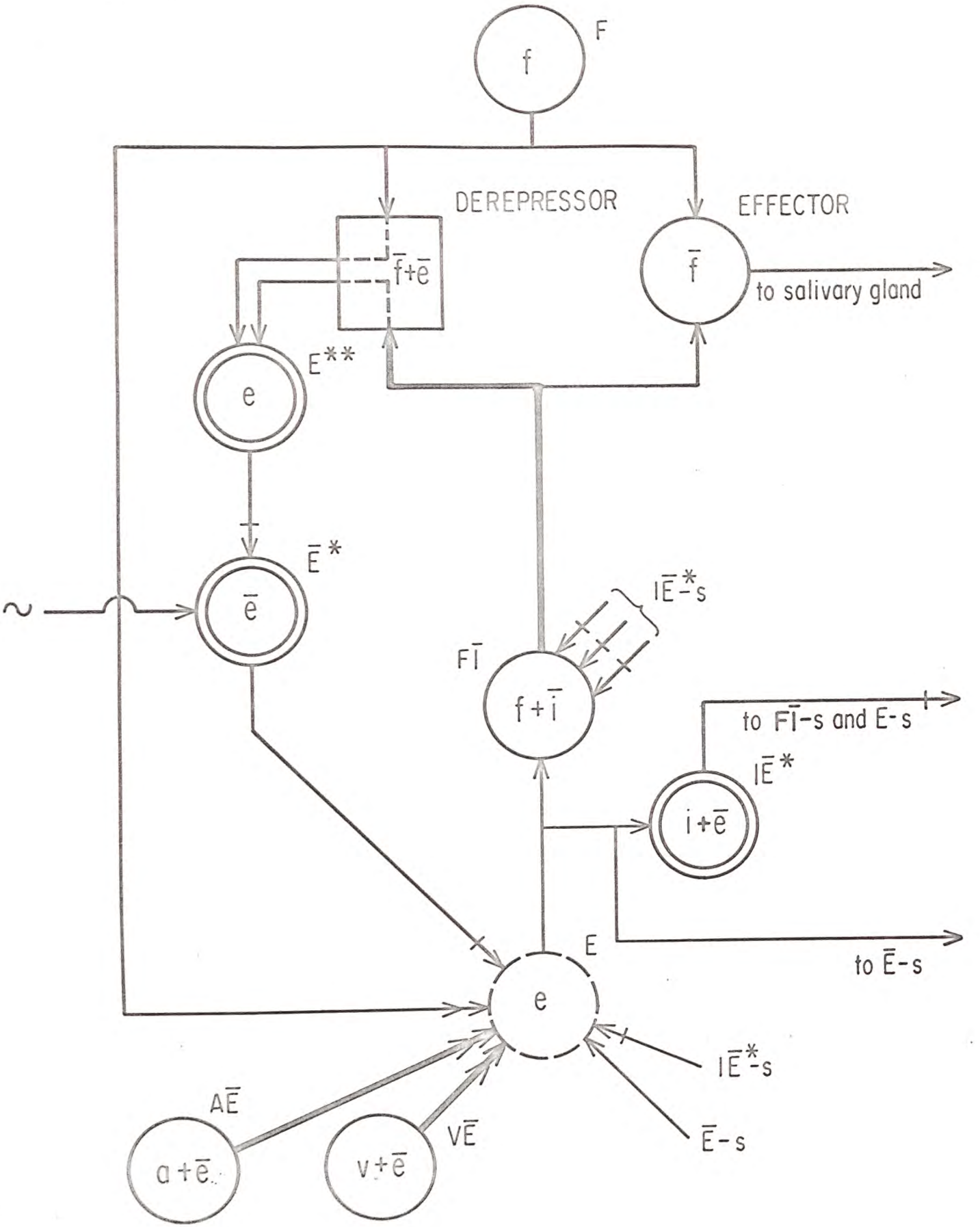


Figure 1: Excitatory neurons are represented by circles and inhibitory neurons are represented by double circles. Excitatory synapses are represented by simple arrows, except if they belong to neurons which are capable of transprinting, in which case they are represented by double arrows. Inhibitory synapses are represented by arrows with a crossbar. The transprintable neuron E is represented by a dotted circle.

Not for Release

Preprint of an article scheduled to appear in
the June issue of the Proceedings of the
National Academy of Sciences.

April 23, 1964

# On Memory and Recall* - Part I

by Leo Szilard

The Salk Institute for Biological Studies
La Jolla, California

The subject matter of this paper is a hypothetical biological process on which the capability of the Central Nervous System to record and to recall a sensory experience might conceivably be based. It may be open to doubt whether one knows enough about the living cell to be able to say anything with reasonable assurance about the molecular processes that the brain employs. Still, with luck, one might perhaps guess correctly the general nature of these processes. To what extent we may have succeeded in doing so, remains to be seen.

The Efficacy of a Synapse Bridging Two Neurons: The neural network models which we shall be using here are based on excitatory neurons, as well as inhibitory neurons of one particular kind, the kind having post-synaptic inhibitory action.

Let us consider an excitatory neuron which contacts through a synapse another neuron. If such an excitatory neuron sends a volley of nerve impulses to this synapse, then a certain quantity of an excitatory "transmitter substance" is released in the vicinity of the pre-synaptic membrane which diffuses across a gap --the synaptic cleft --into the post-synaptic neuron and raises the level of excitation of that neuron by a certain amount. We shall designate this excitatory transmitter substance as "acetylcholine" --in quotes. The "acetylcholine" which diffuses into the post-synaptic neuron is destroyed, in the vicinity of the post-synaptic membrane, by an enzyme which we shall designate as "choline esterase" --in quotes.

The rate at which "acetylcholine" is released in the vicinity of the pre-synaptic membrane is a function of the frequency of the nerve impulses which reach the synapse and we shall designate this rate as the "signal intensity". For the sake

---

*This work was supported by a research grant, administered by The University of Chicago, of the Division of General Medical Sciences of the National Institutes of Health.

of simplicity, we shall assume that the "signal intensity" is for all synapses the same function of the frequency of the nerve impulses which are fed into the synapse.

The rate at which "acetylcholine" is destroyed in the post-synaptic neuron is proportional to the product of the concentration of "acetylcholine" and the concentration of the enzyme "choline esterase" in the vicinity of the post-synaptic membrane. Therefore, if, at a given point in time, nerve impulses of a certain frequency begin to arrive at a synapse, the "acetylcholine" concentration will begin to rise and will asymptotically approach a limit in the vicinity of the post-synaptic membrane, which is proportional to the "signal intensity" and inversely proportional to the concentration of "choline esterase", prevailing in the vicinity of the post-synaptic membrane. The "acetylcholine" concentration which is asymptotically approached at the post-synaptic membrane constitutes the "excitatory input", which is received from the synapse by the post-synaptic neuron. On this basis we may then say that, for any given "signal intensity", the excitatory input received from a given synapse by the post-synaptic neuron is inversely proportional to the "choline esterase" concentration prevailing in the vicinity of the post-synaptic membrane of that synapse.

We assume that the enzyme "choline esterase" is inactivated at the post-synaptic membrane in different synapses at different rates and that this rate of inactivation is determined by the chemical specificities of the two neurons which are bridged by the synapse. We shall assume, for the sake of simplicity, however, that the enzyme "choline esterase" is produced at the same rate in all excitatory neurons.

We designate as the "efficacy" of the synapse the "excitatory input" which a post-synaptic neuron receives from that synapse per unit of "signal intensity". On the basis of the above assumptions we may then say that the efficacy of the synapse is ~~inversely~~ proportional to the rate at which "choline esterase" is inactivated at the post-synaptic membrane which, in turn, is determined by the chemical specificities of the two neurons which are bridged by the synapse.

The Rate of Inactivation of "Choline esterase": We assume that neurons which differ from each other in their response-specificity contain a different set of certain specific proteins in their cell membrane. We shall refer hereafter to these proteins as the "specific membrane proteins".

We postulate that to each "specific membrane protein", there exists a complementary specific membrane protein and that a specific membrane protein molecule can combine with its complementary counterpart, just as an antibody molecule can combine with a molecule of its antigen. Accordingly, two complementary specific membrane proteins may behave as if they were, so to speak, each other's antibodies, as well as each other's antigens.

When an antibody molecule combines with an antigen molecule it undergoes an allosteric transition and an antibody molecule, when it is thus "dimerized", can bind complement. We assume that quite similarly a molecule of a "specific membrane protein", when it combines with its complementary counterpart, undergoes an allosteric transition and, when it is thus "dimerized", it can bind --and not only bind but also inactivate --the enzyme "choline esterase".

The gap (synaptic cleft) between the pre-synaptic membrane and the post-synaptic membrane is estimated to be about 200 Å wide. According to the notions here adopted, there must be, however, a number of places within the active zones of the two synaptic membranes at which this gap is narrowed down, so that the pre-synaptic membrane and the post-synaptic membrane are in physical contact. We assume that at such a point of contact, a molecule of a "specific membrane protein", located in the post-synaptic membrane, can "dimerize" across the synaptic gap, with its complementary counterpart, located in the pre-synaptic membrane. The number of such "dimers", contained within the active zone of the synaptic membranes, would then determine the rate at which the enzyme "choline esterase" is inactivated at the post-synaptic membrane.

Let us now consider two neurons, A and B, which are bridged by a synapse. Neuron A is characterized by a set, (a), of specific membrane proteins, which are present

in its cell membrane and neuron B is characterized by another set, (b). We shall designate as the "overlap number" of these two neurons the number of specific membrane proteins contained within the set (a) which have their complementary counterpart contained within the set (b) [or vice versa].

From this overlap number we may compute the "efficacy" of the synapse which bridges these two neurons. In order to simplify this computation we shall assume that the area of the active zone of the synaptic membrane is the same for all synapses, and also assume, that the concentration of each "specific membrane protein" in the cell membrane is the same for any given neuron. On the basis of these simplifying assumptions, we may then say that the number of "dimers" contained within the active zone of the membrane of a synapse, which bridges neuron A and neuron B, is determined either by the ratio of the "overlap number" to the total number of specific membrane proteins of neuron A, or by the ratio of the "overlap number" to the total number of specific membrane proteins of neuron B --whichever ratio is smaller. We shall designate the smaller one of these two ratios as the "overlap fraction" of the neurons A and B. Accordingly, we may then say that the "efficacy" of a synapse bridging two neurons is proportional to the overlap fraction of the two neurons. This is the first fundamental postulate of our model.

We assume that the same holds true also for the synapses of our inhibitory neurons, except that in this case the "transmitter substance" which diffuses across the synaptic gap into the post-synaptic neuron lowers, rather than raises, the level of excitation of the post-synaptic neuron.

The Transprinting of Neurons: We divide neurons of the Central Nervous System into two broad classes: the "congenitally-determined" neurons and the "memory" neurons. We designate the neurons which attain their full chemical specificity of their cell membrane during the development of the individual (mostly during embryonal life and at the latest during the early post-natal period) as "congenitally-determined" neurons. If all the neurons of the Central Nervous System were of this sort then

the individual would not be able to learn and his behavior would be wholly governed by the inborn reflexes. According to the notions here adopted, an adult can learn, and recall what he has learned, because his Central Nervous System contains "memory neurons" and each of these can, once in a lifetime, acquire an additional set of specific membrane proteins, through a process which we designate as "transprinting".

We assume that there is a class of "congenitally-determined" neurons which are capable of participating in the transprinting of a memory neuron and that if a "congenitally-determined"neuron of this class fires, then those parts of its cell membrane (covering the boutons of the branch fibres of its axon), which form the active zones of the pre-synaptic membranes become permeable for the specific membrane proteins. Similarly, we assume that when a memory neuron fires, then those parts of the cell membrane, (covering its cell body and its dendrites) which constitute the active zones of the post-synaptic membranes, become permeable for the specific membrane proteins. Accordingly, if a "congenitally-determined" neuron of this class contacts a memory neuron through a synapse and if both neurons fire "simultaneously" so that for a period of time both the pre-synaptic and the post-synaptic membrane is permeable for the specific membrane proteins, then the specific membrane proteins of the pre-synaptic "congenitally-determined" neuron will diffuse through the pre-synaptic and the post-synaptic membrane into the post-synaptic memory neuron. We postulate that if a specific membrane protein penetrates in this fashion into a memory neuron it induces in the memory neuron the complementary specific membrane protein --just as an antigen induces its antibody, if it penetrates into certain lymphatic cells of the rabbit. If several such pre-synaptic neurons fire simultaneously with the memory neuron, then the memory neuron will on such an occasion acquire the sets of specific membrane proteins which are complementary to the sets of all of these pre-synaptic neurons.[1] This is the process of transprinting. Its occurrence as an "all or none" process, constitutes our second fundamental postulate.

We shall refer to memory neurons before they are transprinted, as "transprintable" neurons and, thereafter, we shall refer to them as "transprinted" neurons. "Transprinted" neurons resemble "congenitally-determined" neurons, in that they may transprint "transprintable" neurons.

If a neuron participates in the transprinting of a "transprintable" neuron then we may expect this neuron and the "transprinted" neuron to have a large overlap fraction and, accordingly, we may expect synapses bridging these two neurons to have a high efficacy.

The Conditioned Response: In order to illustrate how transprinting may take place, we shall use as an example, the classical (Pavlovian) conditioning of the salivary reflex of the dog.[2] We shall indicate on this occasion, however, only rather sketchily what takes place during conditioning.

When "food" is introduced into the mouth of a dog, the dog responds with salivation. This is the inborn, or unconditioned, response. Let us now expose the dog to a compound stimulus which has an auditory, as well as a visual, component and let us --before the compound stimulus is turned off --place "food" into the mouth of the dog. If, after several such "conditioning exposures", the dog is then presented for the first time with the compound stimulus, unreinforced on this occasion, by the introduction of "food" into its mouth, the dog may be expected to salivate. This is the conditioned response.

We assume that there is a neuron F in the Central Nervous System, characterized by the set (f), which preferentially responds to the stimulus of "food in the mouth". Moreover, we shall assume, in particular, that the signal to which the neuron F responds is the "onset" of this stimulus.

As shown in Figure 1, the neuron F is connected through a synapse to an Effector neuron, which innervates the salivary gland. This Effector neuron is characterized

---

(1) No neuron may, however, incorporate into its cell membrane the complementary counterpart of a specific membrane protein which its cell membrane already contains.

(2) I.P. Pavlov, Conditioned Reflexes, Oxford University Press, 1927.

by the set $(\bar{f})$, where $(\bar{f})$ denotes a set of specific membrane proteins which is complementary to the set (f). Because the overlap fraction of the neuron A and the Effector neuron is <u>one</u>, the synapses which bridge these two neurons have a high efficacy. Therefore, placing "food" into the dog's mouth may be expected to cause the dog to salivate.

In order to account for the conditioned response, we postulate the existence of a number of groups of transprintable neurons E. Each of these groups may consist of several hundred neurons E, all of which have the following in common. The neuron F contacts through a synapse each of the neurons E and in turn each neuron E contacts, through a synapse, an inter-neuron $F\bar{I}$ [characterized by the set $(f) + (\bar{i})$] which in turn contacts, through a synapse, the Effector neuron.

Until something happens which is "significant" from the point of view of the salivary reflex, all the transprintable neurons E are repressed, because they are inhibited by signals which are continuously being sent out by the inhibitory neuron $\bar{E}^*$ [characterized by the set $(\bar{e})$]. This inhibition is assumed to be strong enough to prevent a transprintable neuron E to fire, even if it should receive a substantial aggregate "excitatory input", because the overlap fraction of the inhibitory neuron $\bar{E}^*$ and of the transprintable neuron E is <u>one</u>. It should be noted, however, that after the neuron E is transprinted and acquires a set of specific membrane proteins which is composed of a large number of such proteins, then its overlap fraction with the inhibitory neuron $\bar{E}^*$ is reduced by a substantial factor and the efficacy of the synapse bridging the two neurons is also reduced by the same factor. Accordingly, such a "transprinted" neuron E may be caused to fire in spite of receiving inhibitory signals from the neuron $\bar{E}^*$.

The transprintable neurons E get <u>de-repressed</u> if the inhibitory neuron $\bar{E}^*$ is inhibited by signals emanating from a neural network designated as the "Derepressor". This will happen if the Derepressor sends out signals which are sufficiently strong to excite the inhibitory inter-neuron E**, which in turn will inhibit the inhibitory

neuron $\bar{E}$*. The Derepressor network may receive an input signal from the neuron F and it may also receive an input signal, via the inter-neuron $F\bar{I}$ , from neurons E. These two input signals counteract each other within the Derepressor, however, and they cancel out if the intensity of both input signals is about the same. Accordingly, the Derepressor will send out strong signals only if the intensities of these two input signals differ from each other substantially. In our second paper we shall describe a very simple "neural network" which would function in this fashion.

As will be seen later, the Derepressor network may be expected to send out strong signals if "food" is introduced into the mouth of an unconditioned dog and to send out strong signals also when a dog, whose salivary reflex has been fully conditioned to a certain stimulus, is presented with that stimulus, without having, on this occasion, "food" placed into its mouth. The Derepressor network will not send out signals, however, if the fully conditioned dog is presented with the correct stimulus and "food" is placed into its mouth. Accordingly, no additional neurons E would be transprinted as the result of such "routine exposures".

It is probably generally true that a sensory experience is recorded only if there is "significance" attached to that experience. In our model of the conditioned salivary reflex there is "significance" attached to the stimulus "food in the mouth" for an unconditioned (or not fully conditioned) dog, while for a fully conditioned dog, there is "significance" attached to the conditioned stimulus, but only if that stimulus is not accompanied by the signal "food in the mouth".

We shall try to indicate next in what manner a conditioned salivary response may be established to a compound stimulus which has a visual and an auditory component. To this end we assume that in the Central Nervous System there is a neuron $A\bar{E}$ which responds preferentially to the auditory component of the compound stimulus, and another neuron $V\bar{E}$ which responds preferentially to the visual component. These two neurons are characterized by the sets (a) + ($\bar{e}$) and (v) + ($\bar{e}$) respectively. We assume that the number of different specific membrane proteins contained in the neurons $A\bar{E}$ and $V\bar{E}$, which we designate by $n(A\bar{E})$ and $n(V\bar{E})$, respectively, are large

compared to the number of different specific membrane proteins contained in the transprintable neuron E, which we designate by n(E). Accordingly, we have: $n(A\bar{E}) > n(E)$, and $n(V\bar{E}) > n(E)$.

We assume that, out of a group of several hundred neurons E, a certain fraction is contacted through a synapse by the neuron $A\bar{E}$, a certain fraction is contacted through a synapse by the neuron $V\bar{E}$ and a certain fraction is contacted by both the neuron $A\bar{E}$, as well as the neuron $V\bar{E}$. Because the neuron~~s~~ $A\bar{E}$, as well as the neuron $V\bar{E}$ ~~have~~ has an appreciable --even though small --overlap fraction with the transprintable neurons E, we may assume that if either of these two neurons fires, or if both of them fire, at a time when the transprintable neurons E are de-repressed, then one or more transprintable neurons E will fire also and will on that occasion be transprinted by the neurons $A\bar{E}$ or $V\bar{E}$ or both. If, at the same time, the neuron F fires also, then these same neurons E will be transprinted also by the neuron F. The firing of neuron F alone would, however, not cause the neurons E to fire, even when the neurons E happen to be de-repressed, because the neurons F and the transprintable neurons E have zero overlap.

If the unconditioned dog is for the first time exposed to the compound stimulus, and at the same time "food" is introduced into its mouth, the Derepressor network will send out a strong signal and one, or several, of the transprintable neurons E will be caused to fire. These neurons E will then be transprinted, on this occasion, with the sets $(\bar{f})$, $(\bar{a})$ and $(\bar{v})$. If this dog is exposed, for the second time, to the compound stimulus and at the same time "food" is introduced into its mouth, then the signal sent out by the Derepressor network will be somewhat weaker than the first time. This is so because the neurons E which have been transprinted, at the time of the first conditioning exposure, and which will be excited at the time of the second exposure, have a large overlap fraction with the inter-neuron $F\bar{I}$ and will, therefore, send a signal to the Derepressor network which counteracts the signal received by this network from the neuron F. As the conditioning process is continued and the dog is repeatedly subjected ~~to~~ such conditioning exposures, the neurons E which are trans-

printed with the sets ($\bar{f}$), ($\bar{a}$) and ($\bar{v}$) will increase in number. Finally, the Derepressor network will no longer send out a signal when the dog is exposed to the compound stimulus and at the same time "food" is introduced into its mouth. Such a dog is then fully conditioned and continuing the conditioning exposures would not make the conditioning any deeper.

Let us now expose such a fully conditioned dog to the compound stimulus, unreinforced on this occasion by the introduction of "food" into its mouth. The neurons E which have been transprinted during the previous conditioning exposures, with the set ($\bar{f}$), as well as the sets ($\bar{a}$) and ($\bar{v}$) will now be caused to fire. Because of the substantial overlap of the transprinted neurons E, which contain the set ($\bar{f}$), with the inter-neuron $F\bar{I}$, the firing of the neurons E will lead to the firing of the inter-neuron $F\bar{I}$ and this in turn will lead to the firing of the Effector neuron. Accordingly, on the occasion of this unreinforced exposure of the dog to the compound stimulus, the dog will salivate. This is the conditioned response.

Incidentally, on this occasion when the inter-neuron $F\bar{I}$ fires, it will cause the Derepressor network to send out a strong signal because this network does not receive on this occasion a signal from the neuron F. Accordingly, on this occasion, one or more neurons E will get transprinted with the sets ($\bar{a}$), or ($\bar{v}$) or both, but none of them will be transprinted with the set ($\bar{f}$). Therefore, if the dog is repeatedly exposed to the compound stimulus in such a fashion, i.e. without reinforcement, then the number of neurons E which are transprinted with the sets ($\bar{a}$) or ($\bar{v}$) or both, but not with the set ($\bar{f}$), will increase on each such occasion. The overlap fraction of these transprinted neurons E with the inter-neurons $F\bar{I}$ is zero and, therefore, the excitation of these transprinted neurons E would not contribute to the excitation of the Effector neuron. Their activation would, however, contribute to the excitation of the inhibitory neurons $I\bar{E}$*, with which the neurons E have an appreciable overlap. This is the reason why the accumulation of neurons E which are transprinted with ($\bar{a}$) or ($\bar{v}$) or both, but not with ($\bar{f}$), will extinguish

the previously established conditioned response to the compound stimulus.

Note to the First Model:

One more thing needs to be said at this point: It seems to be a fact that if we establish a conditioned salivary response in the dog to a compound stimulus, which has an auditory as well as a visual component, and if we subsequently extinguish the response, say to the visual component, we thereby automatically extinguish the conditioned response to the auditory component also. It can be shown that, in order to account for this fact, we must assume in our model that the Central Nervous System contains, in addition to a number of neurons E which are characterized by the set (e), an about equal number of neurons $\bar{E}$ which are characterized by the complementary set ($\bar{e}$), and that the neurons E, characterized by one of these two sets, must contact through synapses the neurons $\bar{E}$, characterized by the complementary set (and vice versa). Presumably, this would mean that quite generally neurons characterized by complementary sets of specific membrane proteins must be present in about equal numbers in the Central Nervous System of each individual.

The Second Model: We may escape this complication (if a complication it is), by assuming that every specific membrane protein is complementary to itself. According to this second, alternative, model, any set of specific membrane proteins is then identical with the complementary set of specific membrane proteins. Thus we may write (e) in place of ($\bar{e}$) and (f) in place of ($\bar{f}$), etc. Accordingly, in our second model, the overlap number of two sets is then defined as the number of specific membrane proteins which the two sets have in common and when transprinting takes place, the "transprinted" neuron incorporates the sets of specific membrane proteins of the transprinting neurons. Whatever functions neural networks, of the kind represented in Figure 1, would be capable of fulfilling on the basis of our first model, they would fulfill on the basis of our second model also, and the remainder of our discussion will be couched in terms of this second model, rather than the first one.

The Orderliness of the Inborn Neural Code: According to the notions here adopted, we assume that two neurons in the Central Nervous System, which preferentially respond to two different sensory stimuli that "resemble" each other, must have a

large overlap number. We assume that in the code of the "congenitally-determined" neurons there is an orderly transition to smaller and smaller overlap numbers, as we go from one neuron to other neurons which differ from it more and more in their response-specificity. If it were otherwise, our model could not account for the phenomenon of the "generalization of stimuli" in the conditioned salivary reflex of the dog, first described by Pavlov.

Postcript: If our two fundamental postulates are correct, then it ought to be possible to devise a neural network which would fully account for the phenomena exhibited by the conditioned responses of the autonomous nervous system. (The network described by Figure 1 represents a first attempt in this direction). If one wanted to see, however, whether higher mental functions could be explained on the basis of our two fundamental postulates, then one would first have to invent adequate neural networks. Thus, if one wanted to see whether one could explain on this basis the mental functions which man is capable of performing, but the primates are not, one would perhaps have to invent the very same networks which are contained in the brain of man, but not in the brain of the primates. Clearly, this would be no mean task.

The "mental capacity" of suitable neural network models, operating on the basis of our two fundamental postulates, might be very high. For instance, the recording of information such as may be contained in a "simple sentence" would have to tie down only one "transprintable" neuron. Thus, if one were to expose an individual to a simple sentence every four seconds, twenty-four hours a day, and if, on each such occasion, one would tie down one "transprintable" neuron, then one would tie down just about $10^9$ neurons over a period of one hundred years. This is about one tenth of the number of neurons believed to be contained in the human brain.

THE END

Szilard

1155 E. 57th St.,
Chicago 37, Illinois.

Professor Edward Teller,
Department of Physics,
The University of California,
Berkeley, California.

Dear Teller:

Recently I went through my files relating to my work in the early development of atomic energy and picked out a number of documents. Since you and I were in close touch during most of the period that these documents cover I thought that you might perhaps like to have a set of them. Or else you might just glance at them and return them to me if you don't want them to take up space in your office.

The attached material consists of the following:

1) A letter to the Editor of the Physical Review (Szilard and Zinn, Phys. Rev. 55, p. 799, 1939) that describes the discovery of the neutron emission in the fission of uranium and states that about two neutrons are emitted per fission. (1) The same discovery was made about the same time, but by a different method, independently by Malban, Joliot, and Kowarski, as well as by Anderson and Fermi.

2) An article in the Physical Review (Anderson, Fermi, and Szilard, Phys. Rev. 56, p. 284, 1939) in which the possibility of maintaining a chain-reaction in a uranium-water system is explored. (2)

3) Three letters written by me to Fermi in July, 1939, dated July 3rd, 5th and 8th, proposing the use of the uranium-carbon system. (3)

4) Fermi's answer, dated July 9, which crossed my July 8th letter to him and also my answer to Fermi's letter. (4)

5) During the second week of July, I saw that by using a lattice of uranium spheres embedded in graphite, one would have a great advantage over using alternate layers of uranium and carbon. I also saw

that if we have a lattice of uranium spheres in graphite a further advantage can be gained by using uranium metal instead of using uranium-oxide. It was these facts which led me to believe from then on that there is a good chance of maintaining a chain-reaction in a uranium-graphite system.

Early in July, I told Wigner of my pre-occupation with the uranium-graphite system. The two of us paid a call on Einstein and Wigner left then for the West Coast. You came to New York to spend the summer there, and I kept you informed throughout July on my thoughts concerning the uranium sphere - lattice system. My appraisal for the chances of a chain-reaction in such a system was communicated to Einstein when you and I called on him later in July.

Einstein's letter to President Roosevelt and my memorandum which was attached to it are enclosed. (5)

When Fermi returned to New York in the fall of 1939, I showed him my computations on the uranium sphere lattice in graphite and he showed me his of a homogeneous mixture of uranium and carbon. In accordance with this the memorandum which I submitted to Dr. Briggs in October, 1939 contains the following passage:

"The properties of a system composed of uranium and graphite have been calculated independently, for a homogeneous mixture, by Fermi, and, for a lattice of spheres of uranium oxide, or uranium metal, embedded in graphite, by myself. The results of these two independent calculations are in reasonable agreement and show the the two arrangements have different properties. For instance, in the case of using a lattice of spheres a great advantage could be obtained by using uranium metal insstead of uranium oxide, whereas in the case of the homogeneous mixture the use of uranium metal would be of no great advantage."

So that you do not gain the wrong impression from this passage, I should stress that Fermi knew that it is better to keep the uranium

and carbon in separate layers rather than to use a homogenous mixture. This is shown by the passage in his letter of July 9, 1939, which reads as follows:

"Since however the amount of uranium that can be used, especially in a homogeneous mixture is exceedingly small, even a very small absorption by carbon either at thermal energy or even before might be sufficient for preventing the chain-reaction; perhaps the use of thick layers of carbon separated by layers of uranium might allow to use a somewhat larger percentage of uranium."

In the case of the uranium-water system, Fermi had computed as early as June, 1939 that some advantage can be gained by keeping the uranium and water in separate layers. I have no knowledge, however, that Fermi has recognized the advantage of having a lattice of uranium spheresor rods of small diameter embedded in graphite, or the advantage of using the metal in place of the oxide in such a lattice - until I presented my results to him.

The full text of the memorandum which I submitted to Dr. Briggs in October, 1939 is enclosed. (5)

6) Report A-55 of the Uranium Committee which is a copy of a paper that I submitted to the Physical Review in February, 1940. (6) This paper was accepted for publication, but publication was deferred at my request because of the nature of the paper. On the basis of measurements which Joliot and his co-workers have performed on a uranium-water system, it is concluded in this paper that one should be able to maintain a chain-reaction in a uranium-graphite system if a lattice of uranium metal spheres is embedded in graphite. The paper gives a rough theory of such a system. It explains that the chain-reaction can be controlled by shifting an absorber between positions differing in neutron density and it states that the delayed neutron

emission of uranium permits it to move such absorbers quite slowly.

7) A page from Chemical Engineering News showing that the "first nuclear reactor patent (No. 2,708,656) was issued to Leo Szilard and the late Enrico Fermi on May 17, 1955 by the United States Patent Office."

Yours,

Leo Szilard

FIG. 1. Microphotometric record of the Be I line λ4573A.

Wagner[1] (0.030A). My supposition is that Parker took a microphotometric record of a fringe of too low an order in the interference pattern where the distribution of intensity in a single fringe is deformed by the very rapid falling of the intensity in the direction to the middle of the pattern. In view of the results of my experiments and of the work of Ballard, Anderson and White[4] on the Be III spectrum the conclusion is that if the beryllium nucleus has a magnetic moment different from zero, it must be very small, much smaller than it was supposed by Parker. The weak component of the Be II line 4673A found by Kruger and Wagner is probably due to a foreign line.

S. MROZOWSKI

Institute of Theoretical Physics,
Joseph Piłsudski University,
Warsaw, Poland,
October 4, 1938.

[1] P. G. Kruger and R. C. Wagner, Phys. Rev. 41, 373 (1932).
[2] A. E. Parker, Phys. Rev. 43, 1035 (1933).
[3] R. Ritschl, Zeits. f. Physik 79, 1 (1932).
[4] S. S. Ballard, O. E. Anderson and H. E. White, Phys. Rev. 47, 256 (1935).

## Instantaneous Emission of Fast Neutrons in the Interaction of Slow Neutrons with Uranium*

Recently it became known[1] that uranium can be split by neutrons into two elements of about equal atomic weight. In this fission of uranium the two elements produced have a large neutron excess; moreover they are probably produced in an excited nuclear state. One might therefore expect that these excited fragments instantaneously emit neutrons and that perhaps the number emitted is even larger than one per fission.

One might also expect a delayed emission of neutrons—as was first pointed out by Fermi—if some of the fragments go through one or more beta-transformations before they emit a neutron. Delayed emission of neutrons caused by the action of both slow and fast neutrons on uranium has recently been reported by Roberts, Meyer, and Wang,[2] who find a period of about 12 seconds.

In order to see if there is an instantaneous emission of neutrons from the fission of uranium we have performed the following experiment. We exposed uranium oxide to neutrons which were slowed down by paraffin wax, using as a source of neutrons a block of beryllium from which photoneutrons were liberated by the gamma-rays of radium. A helium-filled ionization chamber connected to a linear amplifier served as a detector for fast neutrons. The ionization pulses of the chamber were observed visually by means of a cathode-ray oscillograph and were recorded by the usual counting arrangement.

Figure 1 shows a diagram of the experimental arrangement. The ionization chamber is covered by a cadmium sheet cap $G$ which prevents the thermal neutrons from penetrating to the helium ionization chamber. A cadmium sheet shield $H$, 0.5 mm thick, is used to cover the cylindrical box $E$ which contains 2300 g of uranium oxide. The uranium oxide is screened from the thermal neutrons by this shield and can be exposed to them simply by removing the shield.

We observed about 50 pulses per minute from the helium chamber when we exposed the uranium oxide to the thermal neutrons in the absence of the cadmium shield $H$, but obtained only 5 pulses per minute when the uranium was screened from the thermal neutrons by the cadmium shield. The difference of about 45 pulses per minute we have to attribute to fast neutrons emitted from uranium under the action of thermal neutrons. It is reasonable to assume that this emission of fast neutrons is connected with the fission of uranium.

Control experiments were carried out in which uranium was replaced by lead. The effect of the presence and absence of the cadmium shield $H$ and the cadmium cap $G$ was tested.

In order to estimate the number of fast neutrons emitted per fission under the action of thermal neutrons we used an ionization chamber lined with a thick layer of uranium oxide having an area of 25 cm². This uranium chamber was put in place of the helium chamber without otherwise materially changing the experimental arrangement. Under these conditions the uranium chamber gave about 45 fissions per minute. Assuming the range of the fission fragments to be about 0.005 g per cm² in uranium oxide, the observed 45 fissions per minute should occur in a surface layer, weighing 0.13 g, of the thick uranium oxide lining. Accordingly, about 800,000 fissions per minute should occur in the 2300 g of uranium oxide which was used in our experiment. By taking into account the solid angle, the size of the helium chamber and the pressure used, and by assuming that the "fission neutrons" have an average collision cross section in helium of $3.5\times10^{-24}$ cm² we find the number of neutrons emitted per fission to be about two.

This number is of course only a rough estimate; the main cause of uncertainty is the considerable variation of the cross section of helium with the neutron energy in

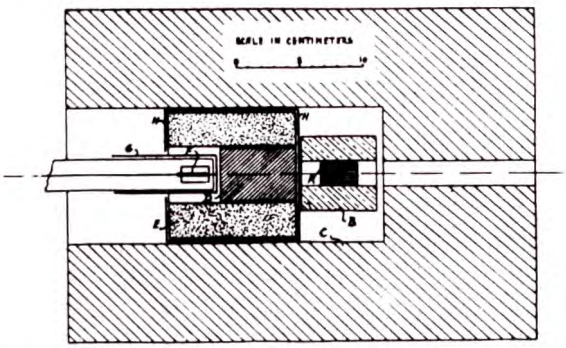

FIG. 1. Arrangement for the observation of the emission of fast neutrons from uranium. $A$, Radium. $B$, Beryllium block. $C$, Paraffin wax. $D$, Lead block. $E$, Box filled with uranium oxide. $F$, Ionization chamber. $G$, Cadmium sheet cap. $H$, Cadmium sheet shield.

the region around one million volts.[3] A hydrogen-filled ionization chamber is now being used in order to obtain a more accurate estimate. It seems to be established, however, that the order of magnitude is one neutron per fission.

Anderson, Fermi and Hanstein have independently, and by a different method, carried out experiments on the neutron emission connected with the fission of uranium. Our observations are consistent with their results, and we wish to thank them for communicating their results to us before publication.

While from our observations we can only say that the time delay involved in this "instantaneous" neutron emission appears to be less than one second, we should expect, for theoretical reasons, this emission to take place within less than $10^{-14}$ second.

We have also looked for a delayed emission of fast neutrons by performing the following experiment. The uranium oxide was irradiated for some length of time in the arrangement shown in Fig. 1. Then the radium was quickly removed from the beryllium block and the cathode-ray oscillograph screen was watched for a period of 15 seconds for an indication of a delayed emission of fast neutrons. After the radium is removed there is no gamma-ray background to set a lower limit for the observable helium recoil energy; the only slight background remaining is due to electrical fluctuations of the amplifier. In 50 experiments, corresponding to a total observation time of more than 12 minutes, we observed only two pulses which may or may not have been due to a delayed emission of fast neutrons. This is to be compared with the emission of 45 fast neutrons per minute, the number observed while the radium is inside the beryllium block. We conclude that, if slow neutrons falling on uranium cause a delayed emission of neutrons which are sufficiently fast for us to observe, their number must be very much smaller than the number of neutrons which we have observed in the instantaneous emission.

We are indebted to Dr. S. Seely for his assistance in carrying out some of these experiments. We wish to thank the Department of Physics of Columbia University for the hospitality and the facilities extended to us, and also wish to thank the Association for Scientific Collaboration for enabling us to use one gram of radium in these experiments.

LEO SZILARD
WALTER H. ZINN

Pupin Physics Laboratories,
Columbia University,
New York, New York,
March 16, 1939.

* Publication assisted by the Ernest Kempton Adams Fund for Physical Research of Columbia University.

[1] O. Hahn and F. Strassmann, Naturwiss. 27, 11 (1939); L. Meitner and R. Frisch, Nature (February, 1939).
[2] R. B. Roberts, R. C. Meyer, and P. Wang, Phys. Rev. 55, 510 (1939).
[3] H. Staub and W. E. Stephens, Phys. Rev. 55, 131 (1939).

# Neutron Production and Absorption in Uranium*

H. L. ANDERSON, E. FERMI AND LEO SZILARD
*Columbia University, New York, New York*

(Received July 3, 1939)

IT has been found[1-3] that there is an abundant emission of neutrons from uranium under the action of slow neutrons, and it is of interest to ascertain whether and to what extent the number of neutrons emitted exceeds the number absorbed.

This question can be investigated by placing a photo-neutron source in the center of a large water tank and comparing, with and without uranium in the water, the number of thermal neutrons present in the water. In the previous experiments of this type[1, 3] it was attempted to have as closely as possible a spherically symmetrical distribution of neutrons. The number of thermal neutrons present in the water was determined by measuring along one radius the neutron density $\rho$ as a function of the distance $r$ from the center, and then calculating $\int r^2\rho dr$. A difference in favor of uranium of about five percent was reported by von Halban, Joliot and Kovarski.[4]

Since one has to measure a small difference, slight deviations from a spherically symmetrical distribution might give misleading results. The present experiments which are based on the same general principle do not require such symmetry. In order to measure the number of thermal neutrons in the water we filled the tank with a ten-percent solution of $MnSO_4$. The activity induced in manganese is proportional to the number of thermal neutrons present. A physical averaging was performed by stirring the solution before measuring the activity of a sample with an ionization chamber. To obtain an effect of sufficient magnitude, about 200 kg of $U_3O_8$ was used.

The experimental arrangement is shown in Fig. 1. A photo-neutron source, consisting of about 2 g of radium and 250 g of beryllium was placed in the center of the tank. The geometry was such that practically all neutrons emitted by the source and by the uranium oxide were slowed down and absorbed within the tank. Each irradiation extended over several half-life periods of radiomanganese and the observed activity of the solution was about four times the background of the ionization chamber. Alternating measurements were taken with the cans filled with uranium oxide, and with empty cans of the same dimensions. The activity proved to be about ten percent higher with uranium oxide than without it. This result shows that in our arrangement more neutrons are emitted by uranium than are absorbed by uranium.

In order to find the average number of fast neutrons emitted by uranium for each thermal neutron absorbed by uranium, we have to determine what fraction of the total number of neutrons emitted by the photo-neutron source is, in our experiment, absorbed in the thermal region by uranium. The number of photo-neutrons

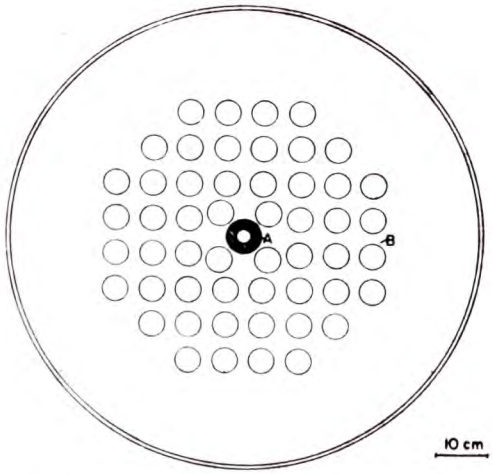


FIG. 1. Horizontal section through center of cylindrical tank which is filled with 540 liters of 10-percent $MnSO_4$ solution. A, Photo-neutron source composed of 2.3 grams of radium and 250 grams of beryllium. B, One of 52 cylindrical cans 5 cm in diameter and 60 cm in height, which are either empty or filled with uranium oxide.

* Publication assisted by the Ernest Kempton Adams Fund for Physical Research of Columbia University.

[1] v. Halban, Joliot and Kovarski, Nature **143**, 470 (1939).
[2] L. Szilard and W. H. Zinn, Phys. Rev. **55**, 799 (1939).
[3] Anderson, Fermi and Hanstein, Phys. Rev. **55**, 797 (1939).
[4] v. Halban, Joliot and Kovarski, Nature **143**, 680 (1939).

emitted by the source is indicated by the activity of the solution in the tank when the irradiation is carried out with empty cans surrounding the source. We obtained a measure of this number by taking into account that in our solution about 20 percent of the neutrons are captured by manganese and the rest by hydrogen. In order to obtain, in the same units, a measure of the number of neutrons absorbed by uranium we proceeded in the following way: A mixture of sand and manganese powder, having the same thermal neutron absorption as uranium oxide replaced the uranium oxide in $\frac{1}{4}$ of the cans which were distributed uniformly among the other uranium oxide-filled cans. After irradiation, all this powder was mixed together, a ten-percent $MnSO_4$ solution was prepared from a sample, and its activity was measured with our ionization chamber.

In this way we found that about 50 percent of the neutrons emitted by the source are absorbed as thermal neutrons by uranium in our arrangement. It follows that, if uranium absorbed only thermal neutrons, the observed ten-percent increase in activity obtained with uranium present would correspond to an average emission of about 1.2 neutrons per thermal neutron absorbed by uranium. This number should be increased, to perhaps 1.5, by taking into account the neutrons which, in our particular arrangement, are absorbed at resonance in the nonthermal region by uranium, without causing neutron emission.

From this result we may conclude that a nuclear chain reaction could be maintained in a system in which neutrons are slowed down without much absorption until they reach thermal energies and are then mostly absorbed by uranium rather than by another element. It remains an open question, however, whether this holds for a system in which hydrogen is used for slowing down the neutrons.

In such a system the absorption of neutrons takes place in three different ways: The neutrons are absorbed at thermal energies, both by hydrogen and uranium, and they are also absorbed by uranium at resonance before they are slowed down to thermal energies. Our result is independent of the ratio of the concentrations of hydrogen and uranium, insofar as it shows that, for thermal neutrons, the ratio of the cross section for neutron production and neutron absorption in uranium is greater than one, and probably about 1.5. What fraction of the neutrons will reach thermal energies without being absorbed will, however, depend on the ratio of the average concentrations of hydrogen and uranium. Since there is an appreciable absorption even far from the center of the resonance band, it follows that the fraction of neutrons absorbed by uranium at resonance will increase with decreasing hydrogen concentration. This has to be taken into account in discussing the possibility of a nuclear chain reaction in a system composed essentially of uranium and hydrogen. A chain reaction would require that more neutrons be produced by uranium than absorbed by uranium and hydrogen together. In our experiment the ratio of the average concentration of hydrogen to uranium atoms was 17 to 1, and in the experiment of von Halban, Joliot and Kovarski this ratio was 70 to 1. At such concentrations the absorption of hydrogen in the thermal region will prevent a chain reaction. By reducing the concentration of hydrogen one would obtain the following effect: On the one hand a larger fraction of those neutrons which reach thermal energies will be absorbed by uranium; on the other hand fewer neutrons reach the thermal region due to an increased absorption by uranium at resonance. Of these two counteracting factors the first is more important for high hydrogen concentrations and the second is more important for low hydrogen concentrations. Starting with high hydrogen concentrations, the ratio of neutron production to total neutron absorption will thus first rise, then pass through a maximum, and, as the hydrogen concentration is decreased, thereafter decrease. We attempted to estimate the quantities involved from the information available about resonance absorption in uranium[5–7] and from the observed net gain of 0.2 in the number of neutrons in our experiment. The effect of the absorption at resonance turns out to be so

[5] Meitner, Hahn and Strassman, Zeits. f. Physik **106**, 249 (1937).

[6] v. Halban, Kovarski and Savitch, Comptes rendus **208**, 1396 (1939).

[7] H. L. Anderson and E. Fermi, Phys. Rev. **55**, 1106 (1939).

large that even at the optimum concentration of hydrogen it is at present quite uncertain whether neutron production will exceed the total neutron absorption. More information concerning the resonance absorption of uranium as well as more accurate measurement of some of the values which enter into our calculation are required before we can conclude whether a chain reaction is possible in mixtures of uranium and water.

We wish to thank Dr. D. W. Stewart, of the Department of Chemistry, and Mr. S. E. Krewer, for advice and assistance in carrying out some of these experiments. We are much indebted to the Eldorado Radium Corporation for enabling us to work with large quantities of uranium oxide in our experiments, and to the Association for Scientific Collaboration for the use of the photo-neutron source and other facilities.

- COPY -

3

Hotel King's Crown
420 West 116th Street
New York City

July 3rd, 1939

Dear Fermi:

This is to keep you informed of the trend of my ideas concerning chain reactions. It seems to me now that there is a good chance that carbon might be an excellent element to use in place of hydrogen, and there is a strong temptation to gamble on this chance. The capture cross-section of carbon is not known: the only experimental evidence available asserts an upper limit of 0.01 times $10^{-24} cm^2$. If the cross-section were 0.01 carbon would be no better than hydrogen, but the cross-section is perhaps much smaller, and it might be for instance 0.001. If it were so carbon not only could be used in place of hydrogen, but would have great advantages, even if a chain reaction were possible with hydrogen also. The concentration of uranium oxide in carbon could be kept very low, so that one could have about 2 gm of carbon per cc. This compares favorably with 1/2 gm of water per cc at the most and means that the mean square of the displacement of a neutron for slowing down to thermal velocities would be only 1.5 times as large in the carbon-uranium-oxide mixture than in the water-uranium-oxide mixture. If capture by carbon can be neglected, the concentration of uranium oxide is determined by the consideration that the average displacement of a thermal neutron for capture by uranium in the mixture must not

become too large. With this as a limiting factor about 1/10 of the weight of the mixture would have to be uranium, and that means that one would need only a few tons of uranium oxide if our present data about uranium are correct.

I personally would be in favor of trying a large scale experiment with a carbon-uranium-oxide mixture if we can get hold of the material.

I intend to plunge in the meantime into an experiment designed for measuring small capture cross-sections for thermal neutrons. This is the proposed experiment: A sphere of carbon of 20 cm radius or larger is surrounded by water and a neutron source is placed in the center of the sphere. The slow neutrons density is measured inside the carbon sphere by an indium or rhodium indicator at two points, one close to the surface, and one close to the center. The slow neutron density at these two points is measured once with, and once without, an absorbing layer of boron (or cadmium), covering the surface of the sphere. It is easy to caluclate from the observed ratio of the differences (of the observed neutron density with and without absorber at the surface of the sphere) obtained for the two points and the scattering cross-section the ratio of the capture cross-section to the scattering cross-section for thermal neutrons. I calculate that a ratio of the neutron densities of the order of magnitude of 75 to 100 would for instance be obtained for two points in a sphere of carbon of about 20 cm radius if the capture cross-section of carbon were 0.005. It seems that very small capture cross-sections can conveniently be measured by this method.

If carbon should fail, our next best guess might be heavy water, and I have therefore taken steps to find out if it is physically possible to obtain a few tons of heavy water. Heavy hydrogen is supposed to have a capture cross-section below 0.003, and the scattering cross-section ought to be 3 or 4 times $10^{-24}$ for neutrons above the 1 volt region. (It is 6 to 7 times $10^{-24}$ for the thermal region). Since heavy hydrogen slows down about as efficiently per collision as ordinary hydrogen, and since hydrogen has a capture cross-section of 0.27 and a scattering cross-section of 20, heavy hydrogen is more favorable.

Yours,

(Leo Szilard)

Hotel King's Crown
420 West 116th Street
New York City

July 5th, 1939

Dear Fermi:

I think the letter I wrote you on July 3rd contains a mistake insofar as the ratio of the thermal neutron density at the center of the sphere and at the surface of the sphere is not 75 to 100, but 95 to 100 for the values given in that letter. The thermal neutron density within the sphere obeys the equation

$$D \frac{d^2 r\rho}{dr^2} - A\, r\rho = 0$$

with

$$D = \frac{w \lambda_{sc}}{3} \; ; \; A = \frac{w}{\frac{\sigma_{sc}}{\sigma_c} \lambda_{sc}}$$

it is:

$$\rho(r) = C \frac{e^{ar} - e^{-ar}}{r}$$

where

$$a = \frac{\sqrt{3}}{\lambda_{sc}} \sqrt{\frac{\sigma_c}{\sigma_{sc}}}$$

For small <u>ar</u> we have $\rho(r) = 2aC\left(1 + \frac{a^2 r^2}{6}\right)$

and the ratio of the densities on the surface and in the center is given by

$$\frac{\rho(r)}{\rho(0)} = \frac{e^{ar} - e^{-ar}}{2ar} \cong 1 + \frac{a^2 r^2}{6}$$

For r = 20 cm, $\lambda_{sc}$ = 2 cm, and $\frac{\sigma_c}{\sigma_{sc}} = \frac{1}{1000}$ we have

$$\frac{\rho(20)}{\rho(0)} \cong 1.05$$

As you see, the method is beginning to get somewhat awkward in the case of carbon for smaller capture cross-sections than 0.005. It seems that it will be possible to get sufficiently pure carbon at a reasonable price. Carbon would also have an advantage over hydrogen insofar as there is no change in the scattering cross-

section in the transition from the resonance region to the thermal region. Consequently, if layers of uranium oxide of finite thickness are used, the diffusion of the thermal neutrons produced in the carbon to the uranium layer is not adversely affected as in the case of hydrogen by such a change. Whether this point is of any importance depends of course on the absolute value of the carbon cross-section. Pending reliable information about carbon we ought perhaps to consider heavy water as the "favorite", and I shall let you know as soon as I can how many tons could be obtained within reasonable time.

With kind regards to all,

Yours,

(Leo Szilard)

Hotel King's Crown
420 West 116th Street
New York City

July 8th, 1939

Dear Fermi:

Sorry to bombard you with so many letters about carbon. This is just to tell you that I have reached the conclusion that it would be the wisest policy to start a large scale experiment with carbon right away without waiting for the outcome of the absorption measurement which was discussed in my last two letters. The two experiments might be done simultaneously. The following can be said in favor of this procedure:

A chain reaction with carbon is so much more convenient and so much more important from the point of view of applications than a chain reaction with heavy water or helium that we must know in the shortest possible time whether we can make it go. This can be decided with certainty in a relatively short time by a large scale experiment, and therefore this experiment ought to be performed. If we waited for the absorption measurement we would lose three months, and in case the result is positive we would still not know with a 100% certainty the answer with respect to the question of the chain reaction.

I thought that perhaps 50 tons of carbon and ~~500~~ 5 tons of uranium should be used as a start. The value of the carbon would only be about $ 10.000.- Since the carbon and the uranium oxide

would not be mixed but built up in layers, or in any case used in some canned form, there will be no waste of material or waste of labor involved in unmixing after the experiment is over. Since the uranium layers may be separated by carbon layers of 20 to 30 cm thickness, or even more, we have to deal with a comparatively simple structure. Much simpler than would be the case for alternating water and uranium layers.

I told Professor Pegram yesterday how I felt about the situation, and he seemed to be not unwilling to take the necessary action. I wonder whether you think it wise to proceed as outlined in this letter.

With kindest regards,

yours,

(Leo Szilard)

- COPY -

(4)

UNIVERSITY OF MICHIGAN

ANN ARBOR

DEPARTMENT OF PHYSICS

July 9, 1939

Dear Szilard,

Thank you for your letter. I was also considering the possibility of using carbon for slowing down the neutrons; in the obviously optimistic hypothesis that carbon should have no absorption at all for neutrons, and assuming for the resonance absorption band of uranium the usual data (which also I rather suspect to be optimistic) one finds from an elementary calculation that the ratio of the concentrations (ratio of the numbers of atoms) of uranium and carbon should be about one thousandth in order to avoid too much resonance absorption. According to my estimates a possible recipe might be about 39000 Kg. of carbon mixed with 600 Kg. of uranium. If it were really so the amounts of materials would certainly not be too large.

Since however the amount of uranium that can be used, especially in a homogeneous mixture is exceedingly small, even a very small absorption by carbon either at thermal energy or even before might be sufficient for preventing the chain reaction; perhaps the use of thick layers of carbon separated by layers of uranium might allow to use a somewhat larger percentage of uranium.

I have been thinking about the experiment that you propose for measuring the small absorption cross section in carbon. It seems to me that you have probably over estimated the difference between rand and center activity in the carbon sphere; moreover I don't see how you can take into account the contribution of those neutrons that become thermal due to impacts against carbon. Their number should probably not be very large, but might disturb very considerably the measurement of a small difference.

I had discarded heavy water as too expensive; but if you can easily get several tons of it it might work very nicely.

The cyclotron here will start working again next week and I hope to be able to get reliable information on the so called resonance absorption of uranium. I shall inform you of the results.

Yours sincerely

Enrico Fermi

P.S. I have received your second letter. If heavy water is too expensive, as I believe, it would be important to find some way of knowing something of the carbon absorption. It seems to me that the use of very thick layers of C might do the trick.

Yours

Enrico Fermi

COPY

Hotel King's Crown
420 West 116th Street
New York City

July 11th, 1939

Dear Fermi:

Many thanks for your letter of July 9th. It obviously crossed with my third letter about carbon which probably reached you on Monday. Today, being in a hurry, I confine myself to discuss one point which you mentioned. You write with reference to the carbon sphere experiment that it might be difficult to take into account the distribution of those neutrons which become thermal due to impacts against carbon, and I wish to say the following in this connection.

The number of such neutrons which become thermal within the carbon is quite large, but their number is taken fully into account by the proposed method.

The density of the thermal neutrons within the carbon obeys the equation

$$D \frac{d^2(\rho r)}{dr^2} - A(r\rho) + f(r) = 0$$

where $f(r)$ stands for the number of thermal neutrons produced in unit time and unit volume at any point within the carbon sphere of the radius.

Let $\rho_1(r)$ be a solution of this equation for the boundary condition $\rho_1(R) = b$ where $b$ is the thermal neutron density at the boundary surface of the carbon sphere in water under the conditions of the experiment.

Let further be $\rho_2(r)$ a solution of the same equation for the boundary condition $\rho_2(R) = 0$, which is realized by covering the surface of the carbon sphere with a thermal neutron absorber. The equation

$$D \frac{d^2(r\rho)}{dr^2} - A(r\rho) = 0$$

will then be obeyed by $\rho = \rho_1 - \rho_2$, and $\rho$ will satisfy the boundary condition

$\rho(r) = b$ Therefore we have

$$\frac{\rho(r)}{\rho(0)} = \frac{\rho_1(r) - \rho_2(r)}{\rho_1(0) - \rho_2(0)} = \frac{e^{ar} - e^{-ar}}{2ar}$$

So much for the "theory". Practical difficulties are of course present.

I may write you again in the next few days and wish today only to add this: Since Anderson did not get an acknowledgment from Physical Review about our note I asked Pegram today to enquire about it. It turned out that the note was too long for a Letter to the Editor and that it will appear as a short paper in the issue of August 1st.

Yours,

(Leo Szilard)

5

C O P Y

Albert Einstein
Old Grove Road
Nassau Point
Peconic, Long Island

August 2nd, 1939

F. D. Roosevelt
President of the United States
White House
Washington, D. C.

Sir:

Some recent work by E. Fermi and L. Szilard, which has been communicated to me in manuscript, leads me to expect that the element uranium may be turned into a new and important source of energy in the immediate future. Certain aspects of the situation which has arisen seem to call for watchfulness and, if necessary, quick action on the part of the Administration. I believe therefore that it is my duty to bring to your attention the following facts and recommendations:

In the course of the last four months it has been made probable - through the work of Joliot in France as well as Fermi and Szilard in America - that it may become possible to set up a nuclear chain reaction in a large mass of uranium by which vast amounts of power and large quantities of new radium-like elements would be generated. Now it appears almost certain that this could be achieved in the immediate future.

This new phenomenon would also lead to the construction of bombs, and it is conceivable - though much less certain - that extremely powerful bombs of a new type may thus be constructed. A single bomb of this type, carried by boat and exploded in a port, might very well destroy the whole port together with some of the surrounding territory. However, such bombs might very well prove to be too heavy for transportation by air.

The United States has only very poor ores of uranium in moderate quantities. There is some good ore in Canada and the former Czechoslovakia, while the most important source of uranium is Belgian Congo.

In view of this situation you may think it desirable to have some permanent contact maintained between the Administration and the group of physicists working on chain reactions in America. One possible way of achieving this might be for you to entrust with this task a person who has your confidence and who could perhaps serve in an inofficial capacity. His task might comprise the following:

a) to approach Government Departments, keep them informed of the further development, and put forward recommendations for Government action, giving particular attention to the problem of securing a supply of uranium ore for the United States.

b) to speed up the experimental work, which is at present being carried on within the limits of the budgets of University laboratories, by providing funds, if such funds be required, through his contacts with private persons who are willing to make contributions for this cause, and perhaps also by obtaining the cooperation of industrial laboratories which have the necessary equipment.

I understand that Germany has actually stopped the sale of uranium from the Czechoslovakian mines which she has taken over. That she should have taken such a action might perhaps be understood on the ground that the son of the German Secretary of State, von Weizsacker, is attached to the Kaiser-Wilhelm-Institut in Berlin where some of the American work on uranium is now being re-

Yours very truly,

(Albert Einstein)

COPY OF MEMORANDUM OF LEO SZILARD, DATED AUGUST 15, 1939, SUBMITTED TO THE PRESIDENT OCTOBER 1939

MEMORANDUM

August 15, 1939

Much experimentation on atomic disintegration was done during the past five years, but up to this year the problem of liberating nuclear energy could not be attacked with any reasonable hope for success. Early this year it became known that the element uranium can be split by neutrons. It appeared conceivable that in this nuclear process uranium itself may emit neutrons, and a few of us envisaged the possibility of liberating nuclear energy by means of a chain reaction of neutrons in uranium.

Experiments were thereupon performed, which led to striking results. One has to conclude that a nuclear chain reaction could be maintained under certain well defined conditions in a large mass of uranium. It still remains to prove this conclusion by actually setting up such a chain reaction in a large-scale experiment.

This new development in physics means that a new source of power is now being created. Large amounts of energy would be liberated, and large quantities of new radioactive elements would be produced in such a chain reaction.

In medical applications of radium we have to deal with quantities of grams; the new radioactive elements could be produced in the chain reaction in quantities corresponding to tons of radium equivalents. While the practical application would include the medical field, it would not be limited to it.

A radioactive element gives a continuous release of energy for a certain period of time. The amount of energy which is released per unit weight of material may be very large, and therefore such elements might be used -- if available in large quantities -- as fuel for driving boats or airplanes. It should be pointed out, however, that the physiological action of the radiations emitted by these new radioactive elements makes it necessary to protect those who have to stay close to a large quantity of such an element, for instance the driver of the airplane. It may therefore be necessary to carry large quantities of lead, and this necessity might impede a development along this line, or at least limit the field of application.

Large quantities of energy would be liberated in a chain reaction, which might be utilized for purposes of power production in the form of a stationary power plant.

In view of this development it may be a question of national importance to secure an adequate supply of uranium. The United States has only very poor ores of uranium in moderate quantities; there is a good ore of uranium in Canada where the total deposit is estimated to be about 3000 tons; there may be about 1500 tons of uranium in Czechoslovakia, which is now controlled by Germany; there is an unknown amount of uranium in Russia, but the most important source of uranium, consisting of an unknown but probably very large amount of good ore, is Belgian Congo.

It is suggested therefore to explore the possibility of bringing over from Belgium or Belgian Congo a large stock of pitchblend, which is the ore of both radium and uranium, and to keep this stock here for possible future use. Perhaps a large quantity of this ore might be obtained as a token reparation payment from the Belgian Government. In taking action along this line it would not be necessary officially to disclose that the uranium content of the ore is the point of interest; action might be taken on the ground that it is of value to secure a stock of the ore on account of its radium content for possible future extraction of the radium for medical purposes.

[illegible]ce it is unlikely that an earnest attempt to secure a supply of uranium will [illegible]efore the possibility of a chain reaction has been visibly demonstrated, it [illegible]cessary to do this as quickly as possible by performing a large-scale ex[illegible] The previous experiments have prepared the ground to the extent that it [illegible]sible clearly to define the conditions under which such a large-scale ex[illegible]ould have to be carried out. Still, two or three different setups may have [illegible]ied out, or alternatively preliminary experiments have to be carried out with [illegible] tons of material if we want to decide in advance in favor of one setup or another. These experiments cannot be carried out within the limited budget which was provided for laboratory experiments in the past, and it has now become necessary either to strengthen--financially and otherwise--the organizations which concerned themselves with this work up to now, or to create some new organization for the purpose. Public-spirited private persons who are likely to be interested in supporting this enterprise should be approached without delay, or alternatively the collaboration of the chemical or the electrical industry should be sought.

The investigations were hitherto limited to chain reactions based on the action of slow neutrons. The neutrons emitted from the splitting uranium are fast, but they are slowed down in a mixture of uranium and a light element. Fast neutrons lose their energy in colliding with atoms of a light element in much the same way as a billiard ball loses velocity in a collision with another ball. At present it is an open question whether such a chain reaction can also be made to work with fast neutrons which are not slowed down.

There is reason to believe that, if fast neutrons could be used, it would be easy to construct extremely dangerous bombs. The destructive power of these bombs can only be roughly estimated, but there is no doubt that it would go far beyond all military conceptions. It appears likely that such bombs would be too heavy to be transported by airplane, but still they could be transported by boat and exploded in port with disastrous results.

Although at present it is uncertain whether a fast neutron reaction can be made to work, from now on this possibility will have to be constantly kept in mind in view of its far-reaching military consequences. Experiments have been devised for settling this important point, and it is solely a question of organization to ensure that such experiments shall be actually carried out.

Should the experiments show that a chain reaction will work with fast neutrons, it would then be highly advisable to arrange among scientists for withholding publications on this subject. An attempt to arrange for withholding publications on this subject has already been made early in March but was abandoned in spite of favorable response in this country and in England on account of the negative attitude of certain French laboratories. The experience gained in March would make it possible to revive this attempt whenever it should be necessary.

Leo Szilard

(5)

(Memorandum of Leo Szilard submitted to Dr. Briggs, October 26, 1939)

THE POSSIBILITY OF A LARGE-SCALE
EXPERIMENT IN THE IMMEDIATE FUTURE

At present it appears quite possible that a nuclear chain reaction could be set up in a system composed of uranium oxide (or uranium metal) and graphite. The graphite would have to be piled up in a space of perhaps 4 x 4 x 4 metres and might weigh about 100 metric tons. Perhaps 10 to 20 tons of uranium oxide would have to be used, embedded in some such pile of graphite.

The probable success or failure of such a large-scale experiment cannot be forecast at present with any degree of assurance. The properties of a system composed of uranium and graphite have been calculated independently, for a homogeneous mixture, by Fermi, and, for a lattice of spheres of uranium oxide, or uranium metal, embedded in graphite, by myself. The results of these two independent calculations are in reasonable agreement and show that the two arrangements have different properties. For instance, in the case of using a lattice of spheres a great advantage could be obtained by using uranium metal instead of uranium oxide, whereas in the case of the homogeneous mixture the use of uranium metal would be of no great advantage. In spite of these calculations, we cannot foretell with certainty whether or not a nuclear chain reaction can be maintained in such a system because the absorption cross section of carbon for slow neutrons is not sufficiently known.

In order to remove this uncertainty, Fermi and I have devised two different experiments by means of which the absorption cross section of carbon, which is very small, could be measured. It is assumed that one of these experiments, or both of them, will be started at Columbia University as soon as the facilities required can be obtained.

If the absorption of carbon should turn out to be comparatively large, we could conclude that the large-scale experiment is bound to fail, and in this case it need not be started. If the absorption of carbon should prove to be exceedingly small, the large-scale experiment would appear to be very promising, and it can be assumed that everybody will then be in favor of starting it without delay.

Unfortunately, we must be also prepared to find an intermediate value for the carbon absorption. In this case a large-scale experiment will have to be performed in order to find out whether or not a nuclear

chain reaction can be achieved with a combination of uranium and graphite. So we may have to make the experiment and risk its possible failure.

It should be borne in mind that a negative result of the large-scale experiment could also be of value by showing with certainty that a chain reaction cannot be achieved with simple means in the near future. Otherwise there remains an ever-present potential threat arising out of experiments on uranium, which are carried out in certain other countries. Therefore, in my personal opinion, a large-scale experiment ought to be performed unless the possibility of its success can be excluded with reasonable assurance on the basis of experiments which are designed to determine the absorption of carbon, or other similar experiments which can be carried out on a moderately small scale.

RECOMMENDATIONS CONCERNING LARGE-SCALE EXPERIMENTS

No expenses need be incurred in connection with large-scale experiments until the absorption of carbon has been measured. On the other hand, steps ought to be taken now in order to prepare the ground for a large-scale experiment, so that this can be started without delay at the proper time. For instance, the possibility of converting uranium oxide into uranium metal ought to be explored. An attempt ought to be made to obtain a promise on the part of certain industrial corporations to supply at the proper time the quantities of the materials, which are required. If possible, these materials ought to be loaned without any financial consideration. Barring an accident in the case of a successful large-scale experiment, most of the materials used would remain unaffected and could be returned after the experiment is completed.

100 metric tons of graphite represent a value of about $33.00 -- at the rate of 15¢ per pound. If a purer brand of graphite has to be used, which rates at 24¢ per lb. the value involved would be $53.00.

20 metric tons of uranium oxide represent a value of $100,000. -- at the rate of $2.50 per lb. If it need not be converted into uranium metal but can be used in the form of oxide in the large-scale experiment, this material could be kept pure and could be returned undamaged. It would be desirable to have up to 50 tons of uranium oxide readily available for experiments in the United States.

## STATEMENT CONCERNING THE POTENTIAL ASSISTANCE OF THE UNION MINIERE DU HAUT KATANGA

It would be of particular value to enlist the assistance of this Belgian corporation which is to some extent controlled by the Belgian Government. It appears to be the only corporation which could supply at short notice 20 metric tons of uranium oxide, and probably even 50 tons. I understand that the Managing Director, Mr. E. Sengier, is on a short visit in America.

From conversations which Professor G. B. Pegram of Columbia University had with a representative of the Eldorado Gold Mines, Ltd., it appears that this Canadian corporation might be able to supply uranium oxide for our purposes at the rate of 1 ton per week. If the uranium oxide were to be bought rather than obtained as a gift or a loan, it might be secured from Canada probably just as easily as from Belgium. On the other hand, the Canadian corporation is rather small and can hardly be asked to give away large quantities of material without financial compensation.

So far, radium up to about 2.5 gms. was used in our experiments, and we had to pay a high rent to a subsidiary of the Union Miniere, the only corporation from which large quantities of radium can be readily rented in this country. An attempt ought to be made to obtain radium for the purposes of such experiments rent-free from the Union Miniere in the future.

Carnotites containing uranium are mined in the U.S.A. by the U. S. Vanadium Corporation which is owned by the Union Carbon and Carbide Corporation. A conversation which I recently had with William F. Barrett, Vice-President of this corporation, did not encourage the hope of obtaining large quantities of uranium oxide from this firm, but the issue could perhaps be reopened.

## STATEMENT ABOUT URANIUM ORE

As far as I was able to find out, pitchblend, which is an ore rich in uranium, is mined in Czechoslovakia, Canada and Belgian Congo. The total content of uranium in the deposit in Czechoslavakia is estimated to be between 1000 and 1500 tons. The canadian deposit visibly contains a total of 3000 tons. Theamount of pitchblend in the Belgian Congo is not known, but it is believed to be very much larger. In the United States

uranium occurs chiefly in the form of carnotites, which is an ore poor in uranium, and is mined for the sake of its vanadium content. The total deposit is estimated to contain 3000 tons of uranium oxide. (Perhaps there are in the United States larger quantities of ore containing a very small amount of uranium which are not included in the above estimate.)

RECOMMENDATION CONCERNING URANIUM ORE

Steps to secure a stock of uranium ores for the government can hardly be recommended at the present time if such steps would involve financial commitments on the part of the government. It might, however, be advisable to begin to study the question in what manner the government could secure such a stock at a later date if required.

For instance, the question has been raised whether it might not be possible to obtain for the government a large quantity of pitchblend from Belgium as a token reparation payment. Such a transaction would not cause alarm abroad if it were arranged before the world learns of the results of some successful large-scale experiment. The transaction could be justified without reference to the uranium content of the ore. Pitchblend is also the ore of radium, and action could be taken on the ground of securing the ore for the sake of its radium content, with a view of extracting the radium at some future date for medical purposes. Action taken on this ground alone might in fact be entirely justified.

(6)

January 31, 1956

The attached report A-55 of the Uranium Committee is a copy of a paper which I sent to the Physical Review in February, 1940. This paper was accepted for publication, but publication was deferred at my request because of the nature of the subject.

Leo Szilard

Leo Szilard

A-55

# Divergent Chain Reaction in Systems Composed of Uranium and Carbon

By L. Szilard


## SUMMARY

It is shown that a divergent chain reaction may be maintained in a system composed of uranium and carbon. Conditions particularly favorable for a chain reaction are obtained if instead of using a homogeneous mixture of uranium and carbon a large number of rather small spheres of uranium metal are used embedded in a mass of graphite. The small uranium spheres may form a close-packed hexagonal or cubic lattice embedded in a large sphere of graphite. The average number of fast neutrons emitted by uranium for one thermal neutron absorbed by uranium is calculated from known experimental data and is found to be about 2. In our system conditions for a chain reaction become more and more favorable as the temperature increases and it is shown that we could expect a chain reaction to be self- generating in such a system at about 900° C. even if the cross-section of carbon were as high as 0.01, its present experimental upper limit. As the intensity of the chain reaction increases with increasing temperature the system is thermally unstable. It can be controlled artificially. The time within which the control would have to respond is found to be longer than one second. As much as 100 tons of graphite and 30 tons of uranium might perhaps be required in order to reach the point of divergence at which nuclear transmutation will go on with an intensity limited only by the necessity of avoiding over heating. But in so far as the capture cross-section of carbon is likely to be below 0.01 the amount of material required will probably be smaller.


CONFIDENTIAL

A-55

CONFIDENTIAL **Notations.**

All numerical values of nuclear cross- sections given in this paper are in units of $10^{-24}$ cm.$^2$

1.) $\sigma_c(C)$ is the capture cross section of carbon for thermal neutrons.

2.) $\sigma_{sc}(C)$ is the scattering cross- section of carbon for thermal neutrons.

3.) $\varepsilon$ is the ratio of the number of thermal neutrons and the number of resonance neutrons absorbed by a sinlge uranium sphere and under the following circumstances: A single uranium sphere is embedded in an infinite space filled with carbon. Neutrons are generated in the carbon and the numbers of thermal neutrons and resonance neutrons produced per cc and sec are equal and have the same value trhoughout the whole infinite mass of carbon.

4.) $E_0$ is the energy at which the resonance absorption line of uranium has its maximum.

5.) $v$ is the velocity of thermal neutrons .

6.) $E_1$ is the lower end of the resonance region of uranium below which we consider the ratio of the absorption coefficients for thermal neutrons and for resonance neutrons as constant.

7.) $E_2$ is the upper end of the resonance region of uranium above which we neglect the resonance absorption in uranium.

8.) $k^{res}$ is the average number of collisions which a neutron moving "diffusing" in carbon survives within the energy region

9.) $k^{th}$ is the average number of collision which a thermal neutron diffusing in carbon survives before being captured by carbon.

10.) $\lambda(C)$ is the mean free path for scattering of thermal neutrons in carbon .

11.) $\rho$ is the density of thermal neutrons .

12.) $Q$ is the number of thermal neutrons produced per cc and sec. in carbon.

13.) $R$ is the radius of a sphere of uranium or uranium oxide which is embedded in carbon.

14.) $A$ is the range of thermal neutrons in carbon defined by

$$A = \frac{\lambda(C)}{\sqrt{3}} \sqrt{\frac{\sigma_{sc}(C)}{\sigma_c(C)}}$$

15.) $J_0^{th}$ is the number of thermal neutrons absorbed by a single uranium sphere embedded in carbon provided that the uranium sphere absorbs each thermal neutron which reaches its surface.

16.) $B$ is the range of the resonance neutrons in carbon defined by

$$B = \frac{\lambda^{res}(C)}{\sqrt{3}} \sqrt{R^{res}}$$

17.) $J^{res}$ is the number of resonance neutrons absorbed by a single uranium sphere embedded in carbon.

18.) $\lambda^{res}(C)$ is the mean free path for scattering for neutrons of energy $E_0$ in carbon.

19.) $\varepsilon_0$ is the value of $\varepsilon$ for a uranium sphere which absorbs each thermal neutron which reaches its surface.

20.) $J^{th}$ is the number of thermal neutrons absorbed by a single uranium sphere embedded in carbon.

21.) $\varphi$ is defined by $J^{th} = \varphi J_0^{th}$ or $\varepsilon = \varphi \varepsilon_0$

22.) $\lambda(U)$ is the mean free path for scattering in the substance of the uranium sphere.

23.) $N_U$ is the number of uranium atoms per c.c. in the substance of the uranium sphere.

24.) $\sigma_a(U)$ is the absorbing cross-section of uranium for thermal neutrons which includes both the cross-section for fission and radiative capture but which does not include the cross-section for scattering.

25.) $\sigma_x(U)$ is the cross-section of uranium for scattering of thermal neutrons.

26.) $U$ is the range of thermal neutrons in the substance of the uranium sphere defined by

$$U = \frac{1}{\sqrt{3}} \sqrt{\frac{\lambda(U)}{N_U \sigma_a(U)}}$$

and in the particular case of pure uranium metal

$$U = \lambda(U) \sqrt{\frac{\sigma_x(U)}{3\sigma_a(U)}}$$

Notations :

27.) $\alpha$ is the fraction of the thermal neutrons absorbed by carbon in an infinite mass of carbon which contains a lattice of uranium spheres .

28.) $J^{th}$ is the number of thermal neutrons absorbed per sec by a uranium sphere within a lattice of uranium spheres embedded in carbon.

29.) $J^{res}$ is the number of resonance neutrons absorbed persec by a uranium sphere within a lattice of uranium spheres embedded in carbon .

30.) $q$ is the fraction of the resonance neutrons produced in carbon which is absorbed as a thermal neutron by the lattice of uranium spheres if the number of thermal neutrons and the resonance neutrons produced per cc and sec. in the carbon are equal and have the same value throughout the whole infinite mass of carbon.

31.) $\alpha_m$ is the value of $\alpha$ for which q becomes maximum.

32.) $q_m$ is the maximum value of $q$.

33.) $q_{corr.}$ is the correct value of the fraction of the resonance neutrons produced in carbon which is absorbed as a thermal neutron by the lattice of uranium spheres if obtained by taking into account that the number of thermal neutrons produced per cc and sec. in the carbon near the uranium spheres is reduced due to the absorption of resonance neutrons by the uranium .

34.) $V$ Is the volume of carbon per uranium sphere.

35.) $L$ is the distance between neighbouring uranium spheres in a cubic or hexagonal close packed lattice .

36.) $n$ is the number of H atoms per uranium atom in a mixture of uranium oxide and water.

37.) $\tau_0$ and $\tau_{int}$ is the mean lifetime of a thermal neutron in water or a mixture of uranium oxide and water,

38.) $\sigma_c(H)$ is the capture cross section of hydrogen for thermal neutrons.

39.) $p$ is the fraction of the resonance neutrons generated in a homogenous mixture of uranium oxide and water which are captured by uranium at resonance.

CONFIDENTIAL



40.) $s$ is the density of water in gm per cc in a homogeneous mixture of uranium oxide and water.

41.) $i$ is the first factor in

$$\varepsilon = \left\{\frac{A^2}{B^2}\right\} \times \left\{\frac{1 + R/A}{1 + R/B}\,\varphi\right\}$$

42.) $j$ is the second factor in the same expression.

43.) $l$ is the critical radius ~~xxxxxxxx~~ of a graphite sphere which contains a lattice of uranium spheres giving the value of the radius for which the chain reaction becomes divergent.

A-55

# Divergent Chain Reaction In Systems Composed Of Uranium And Carbon

## INTRODUCTION 1

As early as 1913 H. G. Wells forecast the discovery of induced radio-activity for the year 1933 and described the subsequent advent of nuclear transmutations on an industrial scale. It was not possible for physicists to realize the potentialities and the limitation of nuclear physics in this direction until after the discovery of the neutron in 1932. Owing to the discovery of artificial radio-activity in 1933 by Joliot and Irene Curie, and Fermi's pioneer work on neutron reactions in 1934, progress in the field of nuclear physics was greatly accelerated. By the middle of 1934 it could be clearly seen that within the framework of modern nuclear physics transmutation of elements on an industrial scale might be achieved by means of a chain reaction in which neutrons form the links of the chain. If there is an element or a mixture of elements which interacts with neutrons and from which a neutron liberates on the average more than one neutron for one neutron which is absorbed within the mixture we have a chain reaction and may bring about nuclear transmutations on a large scale. If a neutron source is placed in the center of a large sphere which is composed of such an element or mixture the number of neutrons emerging out of the sphere will be larger than the number of neutrons emitted by the source in the center of the sphere. If the radius of the sphere approached a certain critical radius the number of neutrons generated in the chain would tend to become infinite. If the radius of the sphere is larger than the critical radius there is no stationary solution of the equation and the number of neutrons would increase exponentially with time.

By simplifying the problem so as to be able to apply the theory of diffusion to the motion of the neutrons which are liberated in the chain reaction it is easy to get an approximate picture of the general type of behaviouw of a chain reaction within a finite sphere of matter.

CONFIDENTIAL

Such a simplified treatment has been applied to the problem as early as 1934 particularly with regard to the potential possibility of setting up a chain reaction in beryllium. At that time it appeared from Bainsbridges's value for the mass of beryllium, and Aston's value for the mass of helium, that beryllium ought to be unstable and that neutrons might be liberated from beryllium by slow neutrons in sufficient numbers to make a chain reaction possible. This idea had to be abandoned, as far as beryllium was concerned, when Aston's value for the mass of helium proved to be in error.

In 1934 the transmutation of uranium by neutrons was discovered along that of other elements by Amaldi, D' Agostino, Fermi, Rasetti, and Segre who found that a number of radioactive elements are generated from uranium by neutrons. An important advance was made by Irene Curie and P. Savitch, who found that an element which behaved chemically apparently like radium was among those produced and later Irene Curie and P. Savitch discovered radio active rare earths among the disintegration products of uranium. Finally Hahn and Strassman announced in December 1938 that in reality uranium splits into a large number of elements of medium atomic weight if irradiated by neutrons.

As soon as this became known it must have been evident to all those who had been thinking previously of the potential possibilities of a chain reaction, as well as to others, that if neutrons should be emitted from splitting uranium atoms in sufficient numbers a chain reaction might be set up in a large mass of uranium. Independently of each other a small number of physicists began therefore to prepare experiments with the aim to discover whether or not neutrons are emitted from splitting uranium.

Ideas along these lines found wider circulation in America through a semi-private meeting held in Washington in January, 1939 under the auspices of the George Washington University and the Carnegie Institute for Terrestrial Magnetism. At this meeting I understand, Fermi drew attention to the potential possibility of a neutron emission from splitting

uranium and some of its possible consequences. For a short time afterwards it seemed that the absorption of uranium would over compensate any conceivable neutron emission since it was found[1] that the cross-section of uranium for splitting by thermal neutrons is about 2 whereas the currently accepted value for the absorption of uranium for the thermal neutrons was 43. However the absorption of uranium for thermal neutrons was thereupon remeasured by Fermi who discovered that its value was only about 5.

A delayed emission of neutrons from uranium under the action of neutrons bombardment was discovered in February 1939 by Roberts, Meyer, and Wang.[2]

A much stronger instaneous emission of neutrons by uranium under the action of thermal neutrons was discovered independently and almost simultaneously by Halban, Joliot, and Kowarski;[3] Anderson and Fermi;[4] and Szilard and Zinn[5] who reported their observations in letters to Nature and to Physical Review dated March 8, March 16, and March 16 (1939) respectively. An observation pointing in the same direction was also reported by v. Droste[6] in a letter to Die Naturwissenschaften dated March 17, (1939).

The first paper to appear in print was that of Halban, Joliot, and Kowarski which was published on Nature on March 18, (1939). A number of papers dealing with the instantaneous neutron emission of uranium were sent to periodicals after this date some of which presumably reporting experiments which were started independently at an earlier date.[7-10]

The balance of neutron absorption and emission by uranium was subsequently studied by Halban, Joliot and Kowarski;[11] Anderson, Fermi and Szilard;[12] and Halban, Joliot, Kowarski, and Perrin.[13] This work demonstrates beyond doubt that, on the average, more than one fast neutron is emitted for one thermal neutron absorbed by uranium. It shows therefore, that in certain circumstances a chain reaction might be maintained in a mixture of uranium and an element which slows down to thermal energies the fast neutrons emitted by the splitting uranium. If it is possible to avoid that too large a fraction of the fast neutrons emitted from the splitting uranium be captured (without causing fission) at resonance by uranium and if it is possible at the same time to avoid that too large a

fraction of the thermal neutrons be captured by the element which is used for the purpose of slowing down, then we would have a chain reaction which may diverge for a sufficiently large mass of uranium.

This does not necessarily mean that a chain reaction can be maintained in a mixture of uranium oxide and water. In a homogeneous mixture of uranium oxide and water a considerable fraction of the neutrons is absorbed by uranium at resonance and it remains doubtful whether in such a mixture the number of neutrons produced may exceed the number of neutrons absorbed. (9) Fermi has investigated the question whether more favorable conditions can be obtained in mixtures of uranium oxide and water by keeping the uranium oxide and water in separate layers and found that a slight improvement can thus be obtained. But even so, for the present the question whether a chain reaction can be obtained in a system composed of uranium and water is being left in abeyance.

A-55

The purpose of the present paper is to show that a chain reaction can be achieved by using an element like carbon for slowing down the neutrons in certain particular systems composed of uranium and carbon. The theory which is given in the present paper can be applied to elements other than carbon but it does not give any useful information for systems composed of uranium and hydrogen.

Though one might think that carbon should be much less efficient for slowing down neutrons than hydrogen from several points of view it would be preferable to use carbon in the form of graphite rather than hydrogen in the form of water. The capture cross-section of carbon for thermal neutrons $\sigma_c(C)$ is small. An upper limit of $\sigma_c(C) > 0.01 \times 10^{-24}\ cm^2$ has been reported by Frisch, Halban and Koch, but this upper limit is not sufficiently low to allow us at present to conclude that a chain reaction could be maintained in homogeneous mixtures of uranium and carbon. For neutrons it takes about 6.5 collisions with carbon atoms to reduce their energy by a factor of e. Thus a neutron which is being slowed down by carbon stays for a long time within the resonance absorption region of uranium. Consequently, very low uranium concentrations would have to be used in order to avoid that a large fraction of the fast neutrons emitted by uranium is absorbed at resonance by uranium. At such very low uranium concentrations, on the other hand, the fraction of the thermal neutrons which is absorbed by carbon might perhaps be too large to permit a chain reaction.

It will be shown, however, in the present paper that if instead of using a homogeneous mixture of uranium and carbon a large number of spheres of uranium which may form, for instance, a close-packed hexagonal or cubic lattice are embedded in carbon, the ratio of the number of thermal neutrons and the number of resonance neutrons absorbed by the uranium can be so much increased that a chain reaction will become possible. It will be seen that this ratio strongly depends on the radius of the uranium spheres and that a rather small radius must be chosen in order to obtain most favorable conditions.

CONFIDENTIAL

A-55

single spheres of uranium.

We wish to first calculate $\varepsilon$, the ratio of the number of thermal neutrons, and the number of resonance neutrons which are absorbed by a single uranium sphere, which is embedded in an infinite space, filled with carbon, in the special case in which the number of resonance neutrons and thermal neutrons produced per c.c. and second are equal and have the same value throughout the whole infinite mass of graphite. In order to obtain a conservative estimate for the value of $\varepsilon$ we shall assume that all neutrons which have an energy between $E = 0.2\ E_0$ and $E = 2E_0$ where $E_0$ is the energy at which the resonance absorption of uranium has its maximum, are absorbed by uranium at resonance if they reach the surface of the uranium sphere by diffusion. That this is indeed a conservative assumption can be seen by considering an absorption line which obeys the Breit-Wigner formula and has its maximum at $E_0$. For such an absorption line the absorption falls off with 1/v in the thermal region. It reaches a minimum at $0.2\ E_0$ then it rises up to $E_0$ and falls again so rapidly that if $E_0$ is not too close to the thermal region the absorption becomes negligible for $2\ E_0$. If $E_0$ is higher than five volts and if the temperature of the thermal neutrons does not exceed 1/10 of a volt then the absorbing cross-section beyond $2\ E_0$ is less than 1/10 of the absorbing cross-section for the thermal neutrons.

A neutron which is slowed down by elastic collisions with carbon atoms and which enters the resonance at $E = E_2$ will survive on the average $k^{res.}$ collisions within the resonance region between $E_2$ and $E_1$ and we have

(1) Under the assumption which we have made above i.e. $E_2 = 2E_0$; $E_1 = 0.2\ E_0$

$$k^{res} = 6.5 \ln 10 = 15$$

This may be compared with the average number of elastic collisions k which a thermal neutron will survive in carbon before being captured by a carbon atom. Since the capture cross-section of carbon is small compared with $\sigma_{sc}(C)$ the scattering cross-section of carbon for thermal neutrons the probability $g_1(h)$ that a thermal neutron will survive $h$ collisions in carbon will be given by

$$g_1(h) = e^{-h\frac{\sigma_c(C)}{\sigma_{sc}(C)}}$$

Accordingly, $k^{th}$ the average number of collisions which a thermal neutron will make with carbon atoms before being captured is given by

$$k^{th} = \int_0^\infty h\, g_1(h)\, dh$$

so that

$$k^{th} = \frac{\sigma_{sc}}{\sigma_c}$$

CONFIDENTIAL

A-55

Let us now first determine the number of thermal neutrons which are absorbed by a single uranium sphere of radius R embedded in an infinite space filled with carbon if $Q$ thermal neutrons are produced per cc and sec. in the carbon. If R is large compared to $\lambda(C)$, the mean free path for elasic scattering of thermal neutrons in carbon, the density $\rho$ of the thermal neutrons in the carbon can be calculated by treating the problem as a diffusion phenomenon. We thus find for $\rho$ as a function of the distance r from the center of the sphere

3 $$D(C)\frac{d^2(r\rho)}{dr^2} - S(C)\,r\rho + Q(r)\,r = 0$$

$$D(C) = \frac{v\lambda(C)}{3}, \quad S(C) = \frac{v}{\lambda(C)}\frac{\sigma_c(C)}{\sigma_{sc}(C)}$$

If the same number of thermal neutrons are produced everywhere in the carbon per cc and sec. we have

4 $$\frac{dQ}{dr} = 0$$

for a sphere which absorbes each thermal neutron which reaches it surface i.e. for a " black" sphere we have $\rho(R) = 0$ and from 3 and 4 find for $r > R$

5 $$\rho(r) = \frac{Q}{S(C)}\left(1 - \frac{R}{r}\,e^{-(r-R)/A}\right)$$

6 $$A = \sqrt{\frac{D}{S}} = \frac{\lambda(C)}{\sqrt{3}}\sqrt{\frac{\sigma_{sc}(C)}{\sigma_c(C)}} = \frac{\lambda(C)}{\sqrt{3}}\sqrt{k^{th}}$$

$\mathcal{J}^{th}$ the number of thermal neutrons which is absorbed by a single uranium sphere per sec. is given by

7 $$\mathcal{J}^{th} = D(C)\,4\pi R^2\,\rho'(R)$$

and for a black uranium sphere we find from No. 5 $\mathcal{J}^{th} = \mathcal{J}_0^{th}$

8 $$\mathcal{J}_0^{th} = 4\pi Q R A^2\left(1 + R/A\right); \quad A = \frac{\lambda(C)}{\sqrt{3}}\sqrt{k^{th}}$$

where $A$ has the dimension of a length and will be called the range of thermal neutrons in carbon.

A-55

Quite similarly since we assume that the uranium sphere is "black" for resonance neutrons we can write for $J^{res}$ the number of resonance neutrons absorbed by the sphere per second with good approximation

(9) $$J^{res} = 4\pi Q R B^2 (1 + R/B)$$

where

(10) $$B = \frac{\lambda^{res}}{\sqrt{3}} \sqrt{k^{res}}$$

is the mean free path of resonance neutrons for scattering and B has the dimension of a length and will be called the range of the resonance neutrons in carbon.

Expression No. 8 is identical with the expression No. 9 which holds for a sphere which is "black" for thermal neutrons. Only the values for $\lambda$ the mean free path for scattering and $k$ the average number of collisions which a neutron survives within the category called thermal or resonance are different for these two categories of neutrons. It would be strictly true that $J$ the number of neutrons belonging to a category which will reach the sphere by diffusion per second is determined in the same way for different categories by $\lambda$ the mean free path and $g(h)$ the function giving the probability of surviving h collisions with carbon atoms. In reality the function $g(h)$ is different for thermal and for resonance neutrons and expression No. 9 holds in so far as we may assume that $J$ is determined with sufficient accuracy by $\lambda$ and $k = \int_0^\infty h\, g(h)\, dh$ the first moment of $g(h)$.

From No. 8 and No. 9 we find as the value of $\varepsilon$ for a sphere which is "black" for thermal neutrons $\varepsilon = \varepsilon_0$

(11) $$\varepsilon_0 = \frac{A^2}{B^2} \frac{1 + R/A}{1 + R/B}$$

Assuming, for example, $\sigma_{sc} = 4.8$; $\sigma_c(C) > 0.005$ and $\frac{\lambda^*(C)}{\lambda(C)} = 1.18$ we find for graphite of density 1.7:

$$A \geqq 43.5\,cm \qquad B = 6.5\,cm$$

and so obtain for small values of R

$$\varepsilon_0(0) = \frac{A^2}{B^2} \geqq 45$$

and for large values of R

$$\varepsilon_0(\infty) = \frac{A}{B} \equiv 6.7$$

CONFIDENTIAL

Large values of R correspond to plane layers of uranium and a comparison of these two values for $\varepsilon_0$ illustrates how very much superior small spheres of uranium are to plane layers.

A real sphere of uranium having a finite radius ~~below 8 centimeters~~ is not "black" for thermal neutrons and the number of thermal neutrons absorbed per second by the sphere is smaller than $J_0^u$. We write

12 $$J^u = J_0^u \varphi$$

and accordingly we have

13 $$\varepsilon = \varepsilon_0 \varphi \quad \text{and} \quad (14)\ \varepsilon = \frac{A^2}{B^2}\,\frac{1+R/A}{1+R/B}$$

In order to calculate $\varphi$ we take into account that inside the uranium sphere the thermal neutron density $\rho$ obeys the equation

(15) $$D(u)\frac{d^2(r\rho)}{dr^2} - \delta(u)\, r\rho = 0$$

$$D(u) = \frac{v\,\lambda(u)}{3} \qquad \delta(u) = v N_u\, \sigma_a(u)$$

having as its solution

(16) $$\rho(r) = \frac{C}{r}\left(e^{r/u} - e^{-r/u}\right); \quad r < R$$

(17) where $u = \sqrt{\frac{D}{\delta}}$ ~~, for pure uranium we have~~ $= \sqrt{\frac{\lambda(u)}{3 N_u \sigma_a(u)}}$

and for ~~[illegible]~~ pure uranium metal we have

(18) $$u = \lambda(u)\sqrt{\frac{\sigma_s(u)}{3\sigma_a(u)}}$$

From equations 3, 4 and 16 we find that $J^u$ the number of thermal neutrons diffusing into the sphere per second is given by

$$J^u = J_0 \varphi$$

where

(19) $$\varphi = \frac{\dfrac{\lambda_{sc}(u)}{u}\left\{\dfrac{e^{R/u} + e^{-R/u}}{e^{R/u} - e^{-R/u}} - \dfrac{u}{R}\right\}}{\dfrac{\lambda_{sc}(C)}{R}\left(1 + R/A\right) + \dfrac{\lambda_{sc}(u)}{u}\left\{\dfrac{e^{R/u} + e^{-R/u}}{e^{R/u} - e^{-R/u}} - \dfrac{u}{R}\right\}}$$

CONFIDENTIAL

A-55

For uranium in its pure state we have from No. 14, 18, and 19

$$(20a) \quad \varepsilon = \left\{ \frac{A^2}{B} \right\} \times \left\{ \frac{1}{1 + R/B} \times \frac{1}{\left( \frac{\lambda(C)}{RG\sqrt{\frac{3\sigma_a U}{\sigma_s(U)}} - \lambda U} + \frac{1}{1 + R/A} \right)} \right\}$$

where G stands for

$$G = \frac{e^{+R/U} + e^{-R/U}}{e^{R/U} - e^{-R/U}} \quad ; \quad R/U = \frac{R}{\lambda(U)} \sqrt{\frac{3\sigma_a(U)}{3\sigma_s(U)}}$$

For $R/U > 2$ we can write $G \cong 1$, the difference being about 3.5% for $R/U = 2$.

The first factor in expression No. 20 a increases proportionately with the reciprocal value of the capture cross-section of carbon. The second factor is practically independent of the carbon cross-section, since we have $R/A \ll 1$. Its value is determined by the density of graphite and uranium and the nuclear values $\sigma_s(U)$, $\frac{\sigma_a(U)}{\sigma_s(U)}$. The value of R may be so chosen as to make this factor a maximum.

All expressions for $\varepsilon$ were so far obtained from diffusion equations involving the assumptions

$$R \gg \lambda(C) \; ; \; R \gg \lambda(U) \; ; \; U \gg \lambda(U)$$

For small values of R the problem can no longer be treated as a diffusion phenomenon and we shall, therefore, refrain from using expression No. 20 or 20 a for values of R of less than 5 cm.

CONFIDENTIAL

## LATTICE OF URANIUM SPHERES

If we have now an infinitely large number of uranium spheres forming a lattice embedded in an infinite mass of carbon and want to calculate the ratio of the number of thermal neutrons and resonance neutrons absorbed by the uranium spheres, we shall again assume for the time being that everywhere in the carbon the same number Q of neutrons enter the resonance region and the thermal region per c.c and second.

In the absence of uranium the thermal neutron density in the graphite is given by $\rho_0 = \frac{Q}{\Sigma(c)}$ . If a lattice of uranium spheres is embedded in the carbon, the average neutron density $\bar{\rho}$ in the carbon is reduced by some factor $\alpha$ .

$$\bar{\rho} = \alpha \rho_0$$

Since the number of neutrons captured per second by carbon is proportionate to the average neutron density, and since in the absence of uranium all the neutrons produced are captured by carbon, the fraction of the neutrons which is captured by carbon in the presence of the uranium lattice is given by $\alpha$ . Correspondingly, the fraction of the neutrons which are absorbed by the uranium lattice is given by $1-\alpha$ .

In order to determine the number of thermal neutrons $J^{th}$ absorbed per second by one uranium sphere within the lattice, we may consider the following: a single uranium sphere, which is embedded in carbon, does not appreciably affect the thermal neutron density at distances which are large compared to R. Equation No. 5 shows that even for a "black" uranium sphere at a distance of 2 R from the center of the sphere $\rho$ has already reached the value of $1/2\,\rho_0$ . For this reason, the uranium spheres within the lattice affect each other with respect to their thermal neutron absorption only in so far as the presence of these spheres in the carbon determines the average neutron density, and we have

$$J^{th} = \alpha J^{th} \tag{20}$$

Further, since the distance L between neighboring uranium spheres within the lattice will be large compared to B, the range of the resonance neutrons in carbon, we have for $J^{res}$ , the number of resonance neutrons absorbed by a uranium sphere within the lattice

$$J^{res} = J^{res} \tag{21}$$

CONFIDENTIAL

From this it follows that q the fraction of all the neutrons which are absorbed by the uranium spheres in the thermal region alone is given by

(22) $$q = \frac{J^{th}}{J^{th} + J^{res}}(1-\alpha)$$

or

(23) $$q = \frac{\varepsilon\alpha}{1+\varepsilon\alpha}(1-\alpha)$$

This expression has its maximum value for $\alpha = \alpha_m$

(24) $$\alpha_m = \frac{-1+\sqrt{1+\varepsilon}}{\varepsilon}$$

and for the maximum value for q we have $q = q_m$

(25) $$\alpha_m = \frac{1-q_m}{2}$$

(26) $$q_m = 1 - 2\frac{-1+\sqrt{1+\varepsilon}}{\varepsilon}$$

or

(27) $$\varepsilon = \frac{4q_m}{(1-q_m)^2}$$

CORRECTED VALUE

By calculating the value of q from $\varepsilon$ we have neglected the effect of the absorption of resonance neutrons (by the uranium spheres ~~embedd~~ in the lattice) on the production on thermal neutrons in the carbon in the neighborhood of the uranium spheres. The absorption of resonance neutrons reduces in reality the value of Q near the spheres below the average value of Q and accordingly the correct number $J^{th}_{corr}$ of thermal neutrons absorbed by the uranium spheres per sphere will be smaller than $J^{th}$. In order to find the value for the difference $(J^{th}_{corr} - J^{th})$ we may ~~proceed~~ in the following way:

If the uranium spheres in the lattice, ~~[illegible]~~, stopped absorbing resonance neutrons then a neutron which reaches a given sphere at least once while its energy is in the resonance region would have some probability of reaching the sphere at least once after it had been slowed down to the thermal region. On the other hand, the probability that the sphere which is

CONFIDENTIAL

.... Not "black" for thermal neutrons absorbs a thermal neutron which reaches the sphere at least once is given by $\varphi$ . ( $\varphi$ was originally defined as the ratio of the number of thermal neutrons which a sphere of uranium absorbs and the number of thermal neutrons which an equally "black" sphere of uranium would absorb under the same previously specified conditions. It is easy to see though that $\varphi$ ~~[illegible]~~ can also be defined as the ratio of the number of thermal neutrons which are absorbed by the uranium sphere to the number of thermal neutrons which reach the surface of the uranium sphere at least once during their life time. That these two definitions of are identical simply follows from the fact that a "black" uranium sphere absorbs all the thermal neutrons which reach its surface during their lifetime.)

It follows that we have

$$J^{th}_{corr} = J^{th} - \nu\varphi J^{res} \quad ; \quad 0 < \nu < 1$$

correspondingly we have

$$q_{corr} = \frac{J^{th} - \nu\varphi J^{res}}{J^{res} + J^{th} - \nu\varphi J^{res}}(1-\alpha)$$

or

$$q_{corr} = \frac{\varepsilon\alpha - \nu\varphi}{1 + \varepsilon\alpha - \nu\varphi}(1-\alpha)$$

and by introducing the value of $q_m$ from equations No 25 and 27 we find

(28) $$q_{corr} = q_m \frac{1 - \frac{\nu\varphi(1-q_m)}{2q_m}}{1 - \frac{\nu\varphi(1-q_m)}{1+q_m}}$$

~~[illegible]~~ If we neglect terms which contain powers higher than the second of $\frac{\nu\varphi(1-q_m)}{1+q_m}$ we obtain ~~[illegible]~~

(29) $$q_{corr} = q_m\left\{1 - \frac{\nu\varphi(1-q_m)^2}{2q_m(1+q_m)}\left(1 + \nu\varphi\frac{1-q_m}{1+q_m}\right)\right\}$$

Taking into consideration that we have $\nu < 1$ and that for the uranium spheres which we shall consider $\varphi$ has a value of about $\varphi \cong 0.5$ we ~~shall~~ may assume $\nu\varphi \leq 0.5$ . ~~[illegible]~~ and find then for $q_m > 0.5$ from No. 28 : ~~we have:~~

(30) $$q_{corr} > q_m \times 0.9$$

With increasing $q_m$ $q_{corr}/q_m$ approaches 1; for $\varphi \leq 0.667$: $q_m \geq 0.68$ we have $q_{corr}/q_m > 0.97$. For $\varphi \leq 0.645$ ; $q_m \geq 0.73$ we have $q_{corr}/q_m > 0.98$

A-55

Spacing of the lattice.

Formula No. 26 giving the value of $q_m$ was derived under the assumption that there is a uniform production of resonance neutrons throughout the whole mass of carbon into which the lattice of uranium spheres is embedded. We have to verify that this assumption is correct. For this reason we have to compare the distance $\sqrt{\bar{r}^2}$ to which a fast neutron "diffuses" away from a uranium sphere from which it is emitted before it is slowed down to thermal energies with the distance L between two neighboring uranium spheres in a close-packed hexagonal or cubic lattice. If the value of L which corresponds to the maximum value of q were large compared to $\sqrt{\bar{r}^2}$ then obviously equation No. 26 giving the value of $q_m$ could not be used.

In graphite of density 1.7 we have $\sqrt{\bar{r}^2}$ about 50 cm. and we shall see that the values of L which correspond to the maximum value of q are smaller for all values of $\sigma_c(C)$ which we are going to discuss in this paper.

In order to estimate L as well as for other reasons we shall calculate the volume V of carbon per uranium sphere in the lattice.

In the lattice of uranium spheres from the Q V neutrons which are slowed down per second within the volume V to resonance energies, the carbon absorbs $\alpha Q V$ neutrons and the uranium spheres in the lattice absorb $(1-\alpha) Q V$ neutrons. Accordingly we have $J^{th} + J^{res} = (1-\alpha) Q V$

and from this we find

31 $$V = 4\pi \varphi \frac{\alpha}{q} A^2 R (1 + R/A)$$

and if q has its maximum value $q_m$ we have $\frac{\alpha}{q} = \frac{1-q_m}{2 q_m}$

and it is

32 $$V = 4\pi \varphi \frac{1-q_m}{2 q_m} A^2 R (1 + R/A)$$

This gives for the ratio of the volumes of carbon and uranium

33 $$\frac{V}{\frac{4\pi}{3} R^3} = 3\varphi \frac{1-q_m}{2 q_m} \frac{A^2}{R^2} (1 + R/A)$$

and for L the distance between neighboring uranium spheres in a hexagonal or cubic close-packed lattice we have

34 $$L^3 = \left(V + \frac{4\pi}{3} R^3\right) \sqrt{2}$$

CONFIDENTIAL

A-55

or

$$(35) \quad L = \cancel{4AB}R\sqrt[3]{1 + 3\varphi\frac{1-\varphi m}{2\varphi m}\frac{A^2}{R^2}(1+R/A)}$$

For large values of $\varepsilon$ we can write

$$\frac{1-\varphi m}{2\varphi m} \cong \frac{1}{\sqrt{\varepsilon}} = \frac{1}{\sqrt{\varphi\varepsilon_0}}$$

so that we would have for $\varepsilon >> 1$

$$(36) \quad \nu \cong 4\pi ABR\sqrt{\varphi(1+R/A)(1+R/B)}$$

From No. 35 we find for R = 8 cm., $\sigma_c(C) = 0.0033$, A = 75.5, $\varphi m = 0.68$

$\varphi = 0.65$,: ~~[illegible]~~.

$L = 51$ cm

CONFIDENTIAL

A-55

BALANCE OF EMISSION AND ABSORPTION OF NEUTRONS BY URANIUM

A direct comparison of the number of fast neutrons emitted by uranium with the number of thermal neutrons absorbed by uranium may be obtained from different types of experiments carried out by Halban, Joliot and Kowarski,[11] Anderson, Fermi and Szilard,[12] and Halban, Joliot, Kowarski and Perrin.[13] These experiments show that on the average more than one fast neutron is emitted by uranium for one thermal neutron absorbed by uranium.

Halban, Joliot and Kowarski[8] reported that $3.5 \pm 0.7$ fast neutrons are emitted per fission. Anderson, Fermi and Szilard[9] reported that about $\mu = 1.5$ fast neutrons are emitted on the average for one thermal neutron absorbed by uranium.

Halban, Joliot, Kowarski and Perrin[13] carried out an experiment of the following type: a sphere of radius r is filled with a homogeneous mixture of uranium and water which contains n atoms of hydrogen per atom of uranium. This sphere is immersed in a large water tank and a photo neutron source is placed in the center of the sphere. The density $\rho$ of the thermal neutrons is measured along a radius and the integrals of

$$I_{int} = \int_0^{r_0} r^2 \rho \, dr \quad ; \quad I_{ext} = \int_0^{\infty} r^2 \rho \, dr$$

are determined, giving a measure of the number of slow neutrons which are present within the mixture inside the sphere and in the water outside the sphere. In another experiment the integral

$$I_0 = \int_0^{\infty} r^2 \rho \, dr$$

is determined for the same neutron source in pure water.

From the values of these three integrals which these authors determined for n = 1, 2 and 3 and r = 25 cm. they concluded that on the average eight neutrons are emitted from the uranium within the sphere for one photo neutron which is slowed down to thermal energies and causes a fission process in uranium. This was interpreted to show that a considerable number of secondary and tertiary neutrons were generated in this experiment.

Since the value of the fission cross-section is not well known and rather difficult to determine, it seems necessary to avoid expressing results in terms of this cross-section and to use the magnitude $\mu$ rather than the number of neutrons emitted per fission. An accurate knowledge of the value of $\mu$ is of greatest importance from the point

A-55

CONFIDENTIAL

of view of estimating the chances and finding the optimum conditions for a chain reaction. In the following we shall therefore indicate in what way an accurate value for $\mu$ can be obtained, from an experiment of the type performed by Halban, Joliot, Kowarski and Perrin:

$F_{int}$, the average number of neutrons which reach the thermal region inside the sphere within the uranium water mixture for one neutron emitted by the source in the center of the sphere, is given by

$$F_{int} = \frac{I_{int}/I_0}{\tau_{int}/\tau_0},$$

where

$$3) \quad \frac{\tau_{int}}{\tau_0} = \frac{n\,\sigma_s(H)}{s\{\sigma_a(U) + n\,\sigma_s(H)\}}$$

is the ratio of the life-time of the thermal neutrons in the mixture inside the sphere and in pure water.

Of the neutrons which are slowed down to the resonance region inside the sphere a fraction p is absorbed at resonance and a fraction (1 - p) reaches the thermal region. $F^*_{int}$ the number of the neutrons reaching the resonance region per second inside the sphere is therefore given by

$$(1-p)\,F^*_{int} = F_{int}$$

$F^*_{ext}$ the number of neutrons reaching the resonance region outside the sphere in the water is the same as $F_{ext}$ the number of neutrons reaching the thermal region outside the sphere in the water and we have, therefore

$$F^*_{ext} = F_{ext} = \frac{I_{ext}}{I_0}$$

P, the total number of fast neutrons emitted by the uranium in the mixture for one neutron emitted by the neutron source in the center of the sphere is equal to the total number of the resonance neutrons produced minus 1, the neutron emitted by the source in the center. Therefore, we have

$$P = F^*_{int} + F^*_{ext} - 1 = \frac{F_{int}}{1-p} + F_{ext} - 1$$

The total number of fast neutrons produced by the uranium divided by the number of thermal neutrons produced within the sphere in the mixture is

$$\frac{P}{F_{int}} = \frac{1}{1-p} + \frac{F_{ext} - 1}{F_{int}}$$

A-55

And finally since the uranium absorbs of the neutrons which reach the thermal region within the sphere the fraction

$$\frac{\sigma_a(U)}{\sigma_a(U) + n\,\sigma_c(H)}$$

we have

$$\mu = \frac{P/F_{int}}{\left(\dfrac{\sigma_a(U)}{\sigma_a(U) + n\,\sigma_c(H)}\right)}$$

or

$$\mu = \frac{\sigma_a(U) + n\,\sigma_c(H)}{\sigma_a(U)}\left\{\frac{1}{1-p} + \frac{\tau_{int}}{\tau_0}\,\frac{I_{int}/I_0 - 1}{I_{int}/I_0}\right\}$$

Introducing the value of $\tau_{int}/\tau_0$ from No. we obtain

$$38 \quad \mu = \frac{1}{1-p} + \frac{n\,\sigma_c(H)}{\sigma_a(U)}\left\{\frac{1}{1-p} + \frac{1}{\delta}\,\frac{I_{int}/I_0 - 1}{I_{int}/I_0}\right\}$$

From this equation we see that we can determine $\mu$ by determining the value of p.

A considerable fraction of the fast neutrons emitted by uranium may of course escape from within the sphere but the value of this fraction need not be determined for our purpose. On the other hand, the formula given for $\mu$ holds with good approximation only if the sphere is sufficiently large to permit us to neglect transition phenomena in the equilibrium between resonance neutrons and thermal neutrons near the surface of the sphere. Since the uranium inside the sphere absorbs resonance neutrons the density of the neutrons which have an energy below the upper end of the resonance region of uranium and above the thermal region is smaller near the surface inside the sphere than near the surface outside the sphere. This has the consequence that neutrons of this category will diffuse from the water across the sphere into the inside of the sphere. If the radius of the sphere were not sufficiently large so that this phenomenon could not be neglected the expression $F_{int}/1-p$ would then give a too large value for the number of resonance neutrons produced inside the sphere. Correspondingly the expression No. would give a too large value for $\mu$. But with the proviso that a sufficiently large sphere is used we shall obtain an accurate value for $\mu$ if only the value of p is measured accurately.

CONFIDENTIAL

The value of p has so far not been measured for hydrogen concentrations as low as $n = 3$ but we can give a lower limit for p for this concentration as we are able to extrapolate by means of theoretical considerations from values of p which have been measured for higher hydrogens concentrations ~~[illegible]~~ c.c. $n = 30$.

In order to do this we shall make use of formulae relating to homogeneous mixtures of hydrogen and ~~[illegible]~~ uranium which will be published shortly by G. Placzek. A general treatment of the process of the slowing down of neutrons in water has been given by E. Fermi in 1936. In a ~~[illegible]~~ uranium oxide - water mixture p, the fraction of the neutrons which is absorbed by uranium between the energies $E_2$ and $E_1$ is given by*

39 $$\ln(1-p) = -\int_{E_1}^{E_2} \frac{f(E)}{E}\, dE \quad ; \quad E_1 > 1.1$$

where

40 $$f(E) = \frac{1}{1 + \frac{nH}{g(E)}}$$

$g(E)$ is the ~~[illegible]~~ cross- section of uranium for radiative capture and H is the scattering cross- section of hydrogen for the resonance neutrons of uranium. ($H \cong 17 \times 10^{-24}$ cm$^2$) If the hydrogen concentration is high so that the energy region in which there is an appreciable absorption by uranium is small compared with the resonance energy $E_0$ one may write

41 $$\ln(1-p) = -\frac{\Gamma}{E_0} \int_{-\infty}^{+\infty} f(E)\, dE$$

~~[illegible]~~ for a single absorption line of the form

42 $$g(E) = \frac{g_0}{1 + \left(\frac{E - E_0}{\Gamma/2}\right)^2} \quad ; \quad g_0 = g(E_0)$$

giving*

43 $$\ln(1-p) = -\frac{\pi\Gamma}{E_0} \frac{1}{\sqrt{\frac{nH}{g_0}\left(1 - \frac{nH}{g_0}\right)}}$$

For $n \leq 30$ we have $\frac{nH}{g_0} \ll 1$ and No 44 gives**

44 $$\ln(1-p) = -\frac{\pi\Gamma}{E_0}\sqrt{\frac{g_0}{nH}}$$

~~[illegible]~~ From this we see that for such hydrogen concentrations for which the formula holds we have for two different hydrogen concentrations n and $n_1$

45 $$\ln(1-p) = \sqrt{\frac{n_1}{n}}\, \ln(1-p_1)$$

---

* Private communication by G. Placzek June, 1939

** Private communication independently by G. Placzek and E. Fermi June, 1939

A-55

This relationship No. 45 does no longer hold for hydrogen concentrations which are as low as n = 3. But we may write in the case of uranium

(46) $$\ln(1-p) = \int_{0.2E_0}^{1.8E_0} \frac{f(E)}{E}\, dE$$

and it is then easy to see that for an absorption line of the form given by No. 42 which is symmetrical in $(E - E_0)$ or even more so for a similar line which deviates from symmetry in the sense that the absorption is larger for smaller energies ( as it is the case for a line which obeys the Breit-Wigner formula) we have

(47) $$\ln(1-p) < \sqrt{\frac{n_1}{n}}\, \ln(1-p_1) \quad \text{if } n < n_1$$

The value of p has been measured by Halban, Joliot, Kowarski and Perrin for n = 30 and was found to be p = 0.2 ± 0.02; using equation No. 47 we find from this

$$p_3 > 0.5 \pm 0.04 \quad \text{for } n = 3$$

According to No. 38 $\mu$ increases with increasing values of p and in the circumstances we should obtain a conservative value for $\mu$ by using the value of p = 0.5.

Using this value and the values

$$\frac{I_{int}}{I_0} = 0.72 \quad ; \quad \frac{I_{ext}}{I_0} = 0.45$$

reported by Halban, Joliot, Kowarski and Perrin for a sphere of 25 cm. radius filled with a uranium oxide--water mixture for which they had n = 3 and s = 0.42 gm./c.c. we find from No. 38

(48) $$\mu = 2 + 0.2\, \frac{3\sigma_c(C)}{\sigma_a(U)}$$

We see that the value obtained for $\mu$ if calculated from this equation is scarcely affected by the wide limits of error of the present experimental values of $\sigma_a(U)$. By attributing the value of ¼ or 1/8 to $3\sigma_c(H)/\sigma_a(U)$ we obtain $\mu = 2.05$ or $\mu = 2.02$ respectively.

In these circumstances we shall use for the present as a presumably conservative value and as the best value at the present available:

$$\mu = 2$$

CONFIDENTIAL

A-55

Conditions For A Chain Reaction

If q denotes the fraction of fast neutrons emitted by uranium which are slowed down to the thermal region and are absorbed as thermal neutrons by uranium and if $\mu$ denotes the number of fast neutrons produced on the average by uranium for one thermal neutron absorbed by uranium then obviously

(49) $$\mu q > 1$$

is the condition for the possibility of a chain reaction. If this condition is fulfilled then a divergent chain reaction can be maintained in a sufficiently large system from which only a small fraction of the neutrons emitted by the uranium within ~~the system~~ can escape across the boundary of the system without being absorbed within ~~the system~~.

Accordingly, the condition for the possibility of a chain reaction in a system composed of a lattice of uranium spheres embedded in carbon

(50) $$\mu q_{cor} > 1$$

and using equation No. 30 we find

$$\mu q_m \times 0.9 > 1 \quad \text{or} \quad q_m > 1.11/\mu$$

From which we find by using equation No. 27 as a sufficient condition for the possibility of a chain reaction

(51) $$\frac{4.44\mu}{(\mu - 1.1)^2} < \varepsilon$$

Using the value of $\mu = 2$ as a presumably conservative value we have as a sufficient condition

$$11.3 < \varepsilon .$$

CONFIDENTIAL

A-55

In order to see now whether a chain reaction is possible we have to calculate from our formulae the numerical value of $\varepsilon$. We shall do that in the following under the assumption that the energy liberated in the chain reaction will maintain the carbon at a temperature of about 900°. and in order to be on the conservative side we shall assume that the temperature of the uranium spheres in which most of the energy is liberated is, in spite of efficient cooling, about the same.

Since we have at room temperature $\sigma_a(C) > 0.01$ we shall have at 900 C. a capture cross-section of carbon half of this value. The scattering cross-section of uranium for thermal neutrons we take to be $\sigma_s(U) \cong 9$. Finally, at room temperature we take $\frac{\sigma_a(U)}{\sigma_s(U)} = 1/2$ and correspondingly we take at 900 C. $\frac{\sigma_a(U)}{\sigma_s(U)} = 1/4$. For a density of graphite of 1.7 and a density of uranium of 15 we then obtain from No. 14 for $R = 8$ cm

$$\varepsilon = 14$$

This being larger than the value required by No. 51 we conclude that in the circumstances we can expect a divergent chain reaction to take place in the system which we have investigated.

In reality the capture cross-section of carbon ~~may of course be~~ is perhaps much smaller than the upper limit which has so far been established and consequently there is hope that conditions will be much more favorable for a chain reaction than would seem from the values so far quoted.

The amount of carbon and uranium required to reach the point of divergence at which nuclear transmutation will proceed at a rate limited only by the necessity of avoiding over-heating is essentially determined by the value of $(\mu q - 1)$

~~In order to see clearly how this value depends on the capture cross-section of carbon on the one hand the values of and~~

CONFIDENTIAL

A-55

In the following we shall calculate how the value of this expression depends on the value of the carbon capture cross-section at room temperature.

We shall take the density of graphite to be 1.7; the density of uranium metal to be 15 and choose R = 8cm.

We then obtain for a capture cross-section of carbon at room temperature of 0.005 the following set of values at 900 C°: $A = 64$ cm $\frac{A^2}{B^2} = 90$; $\varphi = 0.666$ $\varepsilon = 27$; $q_m = 0.681$; $q_{corr} = 0.66$ and for $\mu = 2$

$$(\mu q - 1) = 0.32$$

If the capture cross-section of carbon at room temperature were .003 then at 900 C. our equations would give the following set of values:
$A = 75.5$ cm; $\frac{A^2}{B^2} = 135$; $\varphi = 0.645$; $\varepsilon = 39$; $q_m = 0.728$
$q_{corr} = 0.71$ and for $\mu = 2$

$$(\mu q - 1) = 0.42$$

CONFIDENTIAL

A-55

CRITICAL DIMENSIONS

For a large sphere of graphite which contains a large number of small spheres of uranium 1, the critical value for the radius of the graphite sphere for which the chain reaction becomes divergent may be calculated for various distributions of uranium within the graphite sphere. The optimum distribution of uranium is not uniform within the graphite sphere and will either decrease or increase with r according to whether we want to have a minimum amount of uranium or a minimum value for l. The treatment of this question may as well be postponed until the value of the carbon capture cross-section is known. It will then be possible to find the optimum distribution of uranium as a function of the distance from the center of the graphite sphere and give a value for l. In the meantime, a very rough approximation may give an idea of the order of magnitudes which are involved. In graphite of 1.7 density the average distance $\sqrt{\overline{r^2}}$ to which a fast neutron emitted by uranium diffuses away from its point of origin until it becomes a thermal neutron and reacts with uranium or carbon is about 50 cm. For $\mu q - 1 \cong \frac{1}{\rho}$ we find for the critical radius l from

$$l \sim \sqrt{\frac{3\overline{r^2}}{\mu q - 1}}$$

$l \sim 250$ cm. This corresponds to about 100 metric tons of graphite. If the carbon capture cross-section is lower, then l will be smaller and the amount of graphite required might perhaps be as low as 20 tons.

The amount of uranium required can be calculated from equation No. 33a

$$\frac{4\pi}{3}R^3/v = \frac{1-qm}{6}\,\frac{R^2}{B^2}\,\frac{1}{1+R/B}$$

It may be ~~minimum~~ kept down by choosing a smaller value for R than the value corresponding to the maximum value of $\mathcal{E}$. For R = 5cm. and $q_m = 0.6$ gives $\frac{4\pi}{3}R^3/v = 0.0336$ corresponding to 30 tons of uranium for 100 tons of graphite. For larger values of ~~m~~ $q_m$ we find a smaller ratio of uranium to carbon.

~~For q ——— we would have as the ratio of weights ———~~

MEASUREMENTS

In order to determine the critical dimenstions and the most favorable distribution of the small uranium spheres wihin a large graphite sphere it is essential to have an accurate value for $\mu$ and for the capture cross-section of carbon for thermal neutrons.

In order to have an accurate value for $\mu$ it will be necessary to have a direct measurement of p for small hydrogen concentrations preferably for $n = 3$. In the following we shall indicate in what way an accurate value for p can be obtained:

Let us consider a box filled with a homogeneous mixture of uranium oxide and water and let the box be so large that a neutron which has an energy of less than 1000 volts in the center of the box be slowed down below 1 volt before it reaches the boundary of the box by diffusion. If such a box is then irradiated with neutrons the energy distribution of the neutrons below 1000 volts in the center of the box will be the same as it would be in an infinite space filled with the same uranium water mixture in case of a uniform generation of neutrons throughout the space. If a radio-active indicator like rhodium or indium which has its lowest dominant resonance absorption line below the dominant resonance absorption line of uranium is plaaed in the center of the box the activity induced in the rhodium indicator by the resonance neutrons of rhodium will be ~~called~~ caused only by those neutrons which are slowed down below the resonance region of uranium without being captured by uranium at resonance. We shall call this activity the resonance activity of the indicator and designate it if a rhodium indicator is used with $(Rh^{*} \text{ in } U)$. If, on the other hand, an indicator like, for instance, iodine is used which has its dominant absorption lines above the uranium resonance the resonance activity of this indicator $(J^{*} \text{ in } U)$ will, at least in the ideal case, not be affected by the resonance absorption of uranium. The ratio of $(Rh^{*} \text{ in } U)$ and $(J^{*} \text{ in } U)$ would therefore give some measure of 1 - p if the activity of the indicators as measured by an ionization chamber or electron counter gave a real measure of the number of the neutrons which pass through the resonance region of rhodium or iodine. This, of course, is by no means the case. Therefore, a second experiment has to be performed in which the resonance activities of the rhodium and iodine indicators are determined in the center of another box which contains water. ~~[illegible]~~

(preferably but not necessarily water of the same density as the water contained in the uranium water mixture used in the first experiment) We then find

$$1-p = \frac{(Rh^{*} \text{ in } U) \times (J^{*} \text{ in } H_2O)}{(Rh^{*} \text{ in } H_2O) \times (J^{*} \text{ in } U)}$$

If there are uranium resonance lines of some importance above the lowest resonance lines of iodine then we have

$$1-p < \frac{(Rh^{*} \text{ in } U) \times (J^{*} \text{ in } H_2O)}{(Rh^{*} \text{ in } H_2O) \times (J^{*} \text{ in } U)}$$

giving a reliable upper limit for 1 - p and consequently a lower limit for p which used in conjunction with equation No. 38 will give a lower limit for the value of $\mu$ .

The upper limit which has been reported for the carbon cross-section by Halban, Frisch, and Koch is already so low that it would be difficult to improve upon it unless a method were used which is specifically designed to measure extremely small cature cross-sections. Such a method will be described in the following:

CONFIDENTIAL

~~THE CAPTURE CROSS SECTION OF CARBON~~

~~Since the capture cross section of carbon determines the critical dimensions and the mass of uranium which has to be used in order to reach the point of divergence of the chain reaction it is necessary to measure this value beyond the upper limit which has been reported by Halban, Kriesch and Koch. This upper limit is already so low that it would be difficult to improve upon it unless some method is used specifically designed for measuring extremely small capture cross sections. In the following we wish to describe such a method.~~

Let us consider a sphere of carbon and a neutron source in the center of the sphere. The thermal neutron density inside the carbon will then obey equation No. only in this case Q is a function of r of which we must not assume $\frac{dQ}{dr} = 0$. Let the carbon sphere be immersed in a water tank or surrounded by paraffin wax. The thermal neutron density will then have a cer- fairly high value at the surface of the sphere and inside the sphere it will some function of r, $\rho_1(r)$ If in a second experiment the surface of the sphere in the water is covered by cadmium the thermal neutron density at the surface of the sphere is then reduced to zero and inside the sphere it will be ano- ther function of r, $\rho_2(r)$. The difference $\rho(r) = \rho_1 - \rho_2$ obeys the homogeneous equation

$$D(C)\frac{d^2(r\rho)}{dr^2} - \delta(C)\, r\rho = 0$$

which has the solution

$$\rho(r) = C\,\frac{e^{r/A} - e^{-r/A}}{r}$$

We can thus find A by determining the value of $\rho$ for two values of r, for instance, r=0 and r = r . It is

$$\frac{\rho(r)}{\rho(0)} = \frac{e^{r/A} - e^{-r/A}}{2\, r/A}$$

Or for small values of r/A

$$\frac{\rho(r)}{\rho(0)} \cong 1 + \frac{1}{6}\left(\frac{r}{A}\right)^2$$

Using a sphere of graphite of fifty to seventy centimeters of radius it should be possible to measure the range A with sufficient accuracy. There is a limit to using very large spheres which arises out of the fact that for a very large sphere most of the neutrons emitted in the center of the sphere will be slowed down to the thermal region within the carbon and the thermal neutron density near the surface of the carbon may become very low. If that

A-55

happens, then the difference $\rho = \rho_1 - \rho_2$ will become small and will therefore set a limit to the accuracy of the measurement.

CONFIDENTIAL

A-55

Stabilizing the chain reaction

Soon after the discovery of an abundant neutron emission from uranium ~~and when before it was known whether a way would be found to set up a chain reaction~~ the question of stabilizing such a reaction was a subject of discussion, but the situation as we see it appears to be rather different in practice: (4415)

If a chain reaction could be maintained in a homogeneous mixture of water and uranium or carbon and uranium it would have a certain natural stability in the sense that with rising temperature there would be a decrease in the neutron production. The reason for this is the fact that the absorption of both uranium and hydrogen obey the 1/v law in the thermal region and thus at higher temperatures the range of thermal neutrons in the mixture is larger. Correspondingly, at higher temperatures a larger fraction of the thermal neutron will escape across the boundary of the mixture without having reacted with the uranium in the mixture. This natural stability could even be enhanced by having bodies of strong thermal neutron absorbers inserted in the mixture. Fairly thin sheets of such absorbers as boron, for instance, are practically "black" for thermal neutrons and any strong thermal neutron absorber would stabilize equally well.

A system, on the other hand, in which uranium bodies which are almost "black" for thermal neutrons are embedded in carbon, like the system which we have considered in great detail in the present paper, has no such stability. This is due to the fact that with rising temperature the capture cross-section of the carbon decreases whereas the absorption by the uranium spheres remains almost unchanged. Accordingly, at higher temperatures, a larger fraction of the thermal neutrons is absorbed by uranium and a smaller fraction is absorbed by carbon and this leads to an increase in $q_0$ and thermal instability.

It is, however, quite easy artificially to stabilize the chain reaction by slowly shifting the position of absorbing bodies within the system in such a way as to reduce the average value of q whenever the intensity of the neutron radiation emanating from the chain reaction increases. One might perhaps think that the time within which such controlling action would have to take place is very short. We shall therefore now show that this is not so.

CONFIDENTIAL

Of the neutrons which are emitted in the chain reaction by uranium only a fraction $\psi$ is absorbed within the system and $1-\psi$ escapes across the boundary of the system without reacting with uranium. A stationary state can be maintained as long as

$$\mu q \psi < 1$$

We write

$$q\psi = \delta(T, x(t))$$

In order to indicate that this product is a function of the temperature T and also depends on a parameter such as the position of some absorbing or scattering body near or within the system which can be shifted by some controlling mechanism and thus be made a function of time t.

In order to have a large neutron production we must maintain a chain reaction near the point

$$\mu \delta_0 = 1$$

If this product becomes larger than one, as it may well happen then there is an exponential rise in the neutron production and accordingly also in the temperature. In case of a sudden small deviation from one

$$\Gamma = \delta_0 (1+\xi)$$

the time $t_2$ in which the number of neutrons doubles is given by

$$t_2 = \xi t_1$$

where $t_1$ is the time which a fast neutron emitted by a uranium atom in the system would require to produce two fast neutrons if it is slowed down and absorbed (as a thermal neutron) within the system.

For instance if we have a sudden change in $\delta$ of 1 ‰ as we well may have and if we have $t_1 = 4 \cdot 10^{-3}$ sec then it would take 4 seconds for the neutron production to double its value and accordingly there would be only an insignificant rise in the temperature if the control responded within 4 seconds.

It is easy to see that for a lattice of uranium spheres in carbon $\tau_1$, the mean life-time of a thermal neutron within the system is given by

$$\tau_1 = \alpha \frac{\sigma_c(k)}{\sigma_c(k)} \frac{\lambda(k)}{v}$$

For $\sigma_c(k) = 0.005$ at room temperature, for instance, we have at 900 C.

$q_m = 0.66$ and $\alpha_m = \frac{1-q_m}{2} = 0.17$ giving at 900 C.

$$\tau_1 = 4 \times 10^{-3} \text{ sec}$$

A-55

In calculating $t_2$ we did not take into consideration the fact that a fraction of the neutrons is emitted by uranium with a time delay of about ten seconds. Though this fraction is small it has a marked effect in leading to still longer times than those which we have estimated. But as for all practical purposes the time $t_2$ which we have found is already long enough we need not include for the present the delayed neutron emission in the treatment of the subject.

A way to stabilize the nuclear chain reaction in a lattice of uranium spheres which is "economical" from the point of view of the nuclear phenomena involved is illustrated in figure 1. The uranium sphere which is surrounded by a spherical layer of liquid bismuth (serving the purpose of cooling the uranium in a way which does not reduce the nuclear efficiency of the arrangement as expressed by $q$ is shown in this figure. A short rod or disc composed of an element which strongly absorbs thermal neutrons is near the center of the uranium sphere and is shielded by the uranium from thermal neutrons. This rod or disc can move within a tube or slit and its position may be controlled by the intensity of the neutron radiation emitted by the chain reaction. If the intensity of this radiation increases the rod or disc may be automatically moved away from the center of the uranium sphere and ultimately if required entirely out of the uranium sphere. It will then absorb larger and larger numbers of thermal neutrons thereby reducing the value of $q$ and thus stabilizing the chain reaction.

## CONCLUSIONS

We conclude that we can expect a chain reaction to take place in a sufficiently large mass of graphite which contains, for instance, a close-packed hexagonal or cubic lattice of uranium spheres. The capture cross-section of carbon is likely to be smaller than the upper limit so far established and consequently there is hope that moderately large masses of graphite and uranium or uranium oxide will be sufficient to reach the point of divergence at which nuclear transmutation can be maintained at an intensity which is limited only by the necessity of avoiding over heating.

Large quantities of radio-active elements will be produced directly from the splitting uranium atoms and indirectly by the intense neutron emission. The necessity of protecting human beings from deadly irradiations emanating from the chain reaction will undoubtedly limit the scope of practical applications and perhaps will slow down the industrial development of this field but it is difficult to imagine that practical applications should not follow in due course of time the present turn of events in physics.

In so far as the production of power for practical purposes is concerned the crucial question which will determine the scope of applications is now whether the rare isotope of uranium 235 or the abundant isotope 238 is the active agent in the thermal neutron reaction. If the rare isotope is the active agent ten tons of uranium may become exhausted by the chain reaction after having supplied as much power as can be obtained from about fifty thousand tons of coal. In case of the other alternative, ten tons of uranium could supply more power than five million tons of coal without being used up. Though N. Bohr put forward interesting arguments in support of the view that it is the rare isotope which is split by thermal neutrons this question will have to be decided by direct observations performed on small samples of the separated isotopes. Only after some such observation shall we be able to express a well balanced opinion upon the immediate future of "atomic engineering."

CONFIDENTIAL

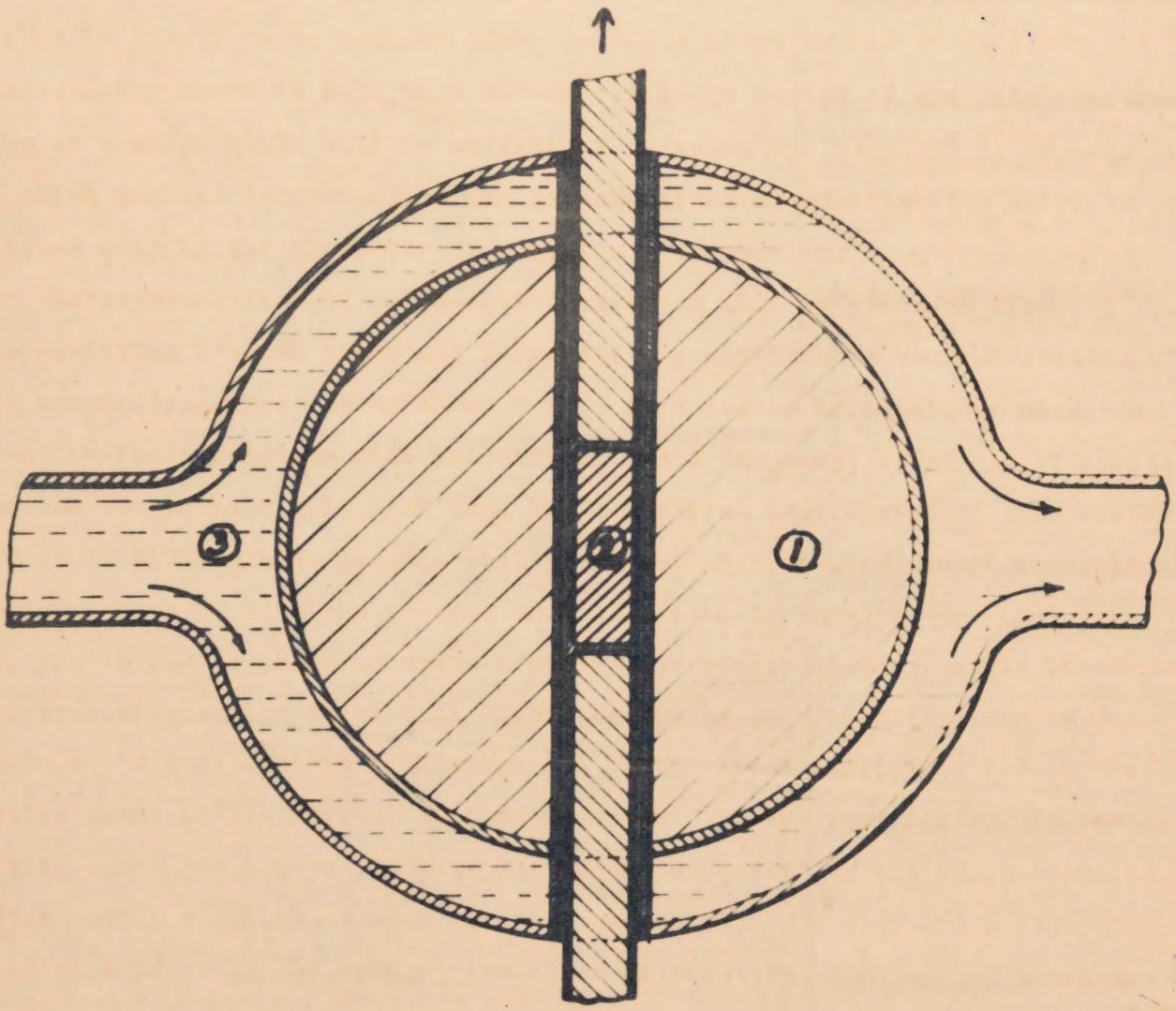


1 represents a sphere of uranium metal. 2 represents a rod, composed of a thermal neutron absorber moving in a vertical bore, or a circular disc having a horizontal axis moving in a vertical slit in the uranium sphere 1. 3 is a spherical shell of liquid bismuth which surrounds the uranium sphere.

**Nuclear Age Milestone: First Reactor Patent**

**The first nuclear reactor patent (No. 2,708,656) was issued to Leo Szilard and the late Enrico Fermi on May 17 by the U. S. Patent Office. Among other things, the patent discloses the inventors' method by which they and their coworkers achieved the first self-sustaining chain reaction in the pile at the University of Chicago on Dec. 2, 1942. This patent will be one of the legal foundations upon which the AEC licensing procedure for atomic reactors will rest. Holding the patent is AEC's patent counsel Roland A. Anderson as he stands before a picture of the Chicago pile in the AEC council room. Anderson classes the patent in importance with those issued for the cotton gin, telegraph, and telephone. Although most of the information disclosed by the patent has previously been declassified, it still contains details of interest to those without access to classified information. In the parlance of the Patent Office, the issuance of the patent formally establishes a "new art" within the Office's classification system**

**What Next?** The FTC survey is strictly a fact finding one. In the words of FTC chairman Edward F. Howrey, it is described as "turning a factual searchlight on an economic problem whose dimensions have been obscured by lack of current information."

The survey finds, however, that all of the forms and procedures followed in making corporate mergers are normal characteristics of modern corporation organization, finance, and management. This may lead, says the commission, to socially desirable developments to the extent that such acquisition increases efficiency in production and distribution, or simply reflects a free and competitive market for used fixed assets.

Almost with the same breath, nevertheless, the commission adds that mergers may also lead to undesirable results in that they may restrain or eliminate competition or tend to monopoly in particular lines of goods or services. In view of the methods used, the survey concludes, no *per se* basis for evaluating the effects of corporate acquisitions on the public interest exists.

Since the main purpose of the survey is to provide facts for the Government, further conclusions and recommendations on mergers can be expected from Congress, the Justice Department, and FTC. As far as FTC is concerned, the facts will be studied to determine what corrective action—if any—should be taken. The commission, moreover, says it intends to consult with all other interested Government agencies to decide "whether or to what extent legislative recommendations are desirable."

All signs in Government point to the fact that businesses of all kinds will be under a high-powered monopoly and merger microscope this year and probably for a year or two to come. In addition to the FTC survey, the Justice Department's Antitrust Study Group earlier (C&EN, April 4, page 1544) issued a report, with recommendations, after a two-year study of the U. S. antitrust laws. This report proved to be highly controversial in Congress and may or may not be the reason why Congressmen have had much to say about antitrust matters recently. The Justice Department under the new administration also has shown an increased tempo in initiating, prosecuting, and concluding antitrust cases. Thus, with the two trust watching agencies of the executive branch having provided up-to-the-minute data, the next major move—if any—is probably up to Congress.


# Improve Wetting & Bonding of Asphaltic Coatings

Pure asphalt coatings and coatings with an asphalt base are given greatly increased wetting and bonding properties with Pave, an ionic surface active agent.

Asphaltic coatings containing Pave will bond with greater strength to surfaces on which they are normally used. By increasing the wetting properties of the asphalt with Pave, the coatings are frequently successful on other materials where before they could not be used.

Pave is chemically stable in asphalt. With this property the full benefit of Pave is available in high temperature applications. Pave remains active in the coating after application to add to the serviceability of the coating.

To obtain maximum wetting and bonding benefit for most applications, use only ½% Pave, based on the weight of the asphalt.

**For a laboratory sample of Pave, write today!**

**Applicable data from Carlisle's continuing Pave research and testing program will be sent when details of the coating or bonding problem are provided.**

**carlisle**
**CHEMICAL WORKS, INC.**
READING, OHIO

manufacturers of fine industrial chemicals